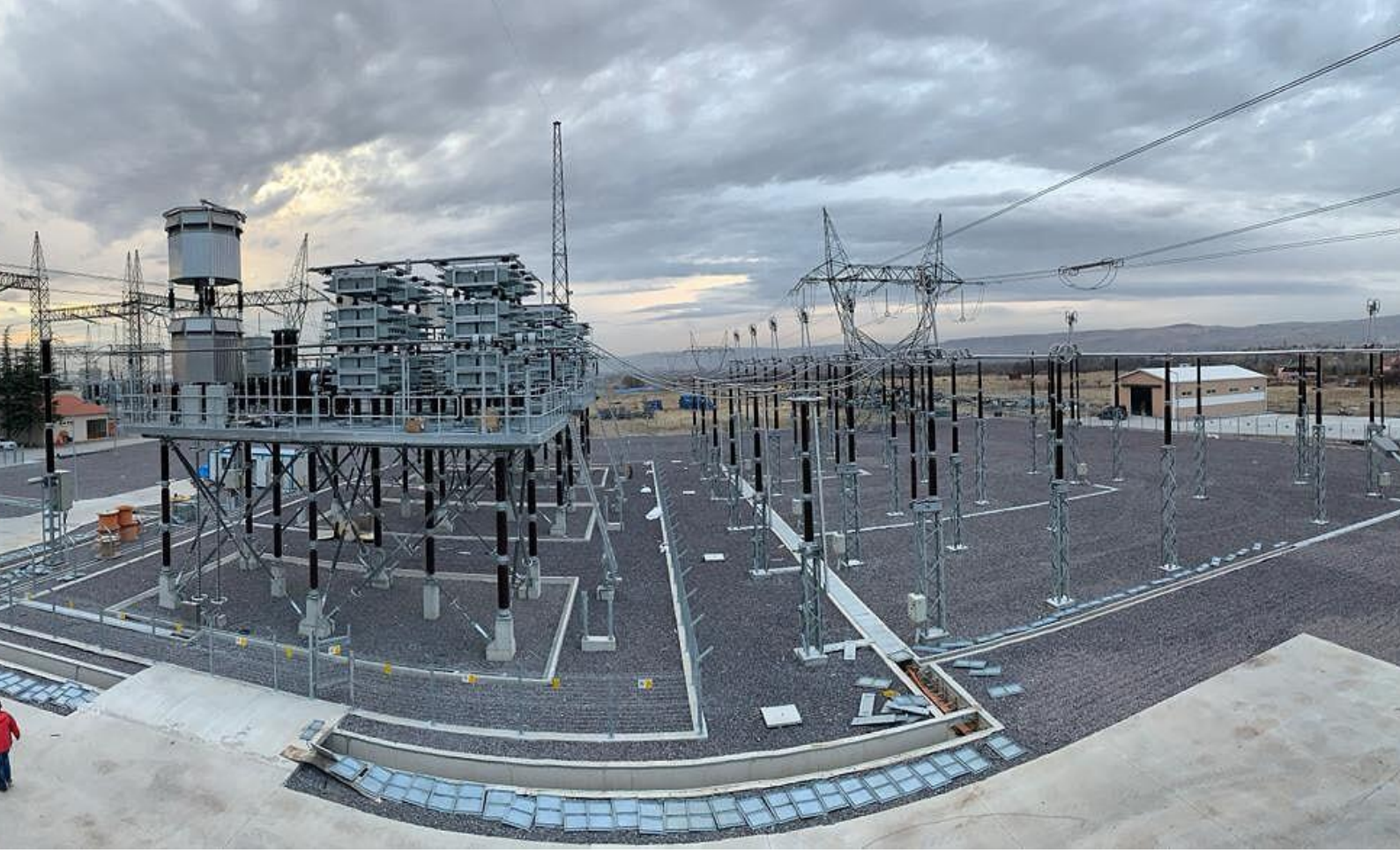

FIXED SERIES COMPENSATION (FSC)

Training Book

Summary:

Fixed Series Compensation Systems (FSC) are installed to reach a more efficient use of the transmission lines. The diversification of generation, transmission and distribution, in additon to long transmission distances and large generating power plants are resulting in an increased demand for economic and reliable operation of transmission systems. The demand for increasing power transfer means either more transmission lines or compensantion of the existing lines. At this point, series compensation is one of the most economical ways to improve the power transmission capacity of lines.

Huseyin GUZEL

hguzel@emta.com.tr

Sieyuan 思源电气

EMTA ENERGY

CONTENTS

1. Basic İnformation 8

1.1-What is the Capacitance? 8

1.2-What is the Capacitor? 8

1.3-What is the Dielectric Strength? 9

1.4-What is the Power Factor (PF) Correction? 10

2. Instroduction to Fixed Series Compensation (FSC) 12

3. Kayseri Capacitor Bank Project Basics - 420kV/396MVar/2000A 14

3.1- Introduction 14

3.2- Project Basic Information 14

3.3- The Main Parameters 15

3.4- Main Circuit Scheme of FCS 15

3.5- Fault Squence and Duty Cycle 16

3.6- Electrical Pirmary Technical Requirement Drawing 17

3.7- Layout of One Phase Platform 17

3.8- Section View of One Phase Platform 18

3.9- Total Layout of FSC Cabinet 18

3.10- Monitoring and Control System Diagram 19

3.11- Protection Configuration Diagram 19

3.12- Protection System Schematic Diagram 20

3.13- Measure System Schematic Diagram 20

3.14- Control System Schematic Diagram 21

3.15- Blocking Logic Diagram 21

3.16- Foundation Layout 22

4. Training Series of FSC Engineering-1: FSC and TSCS 23

4.1- Instroduction to FSC 24

4.2- FSC Projects 26

4.3- Instroduction to TCSC 30

4.4- TCSC Projects 32

5. Training Series of FSC Engineering-2: FSC Basic Design 34

5.1- System Design 34

5.2- System Design Interface 35

5.3- Engineering Design 36

5.4- Engineering Design Interface 39

6. Training Series of FSC Engineering-3: FSC HV Equipments 40
6.1- Topology Diagram 40
6.2- Series Capacitors 40
6.3- MOV 43
6.4- Spark GAP 44
6.5- Bypass Circuit Breaker (by-pass switch) 45
6.6- Damping Device 45
6.7- Platform Support System 47

7. Training Series of FSC Engineering-4: FSC Control and Protection System 48
7.1- Abbreviations 48
7.2- Control and Protection (C&P) System 48
7.3- Substation Automation (SAS) System 49
7.4- Measurement and Control (M&C) System 54
7.5- Protection System 56

8. Training Series of FSC Engineering-5: FSC Protection Principles 61
8.1- FSC Protection Condiguration 61
8.2- Capacitor Protection 62
8.3- MOV Protection 65
8.4- Spark GAP Protection 68
8.5- Bypass Switch (BS) Protection 70
8.6- Other Protection 73

9. FSC Installation and Assembly Manual 78
9.1- Scope 78
9.2- Product Introduction 78
9.3- Installation References 79
9.4- FSC Device Structure Drawings 79
9.5- Installation and Assembly 81
9.6- Safety Precautions 103
9.7- Platform Composite Insulators Force Measuring Device Usage Instruction 103

10. FSC Capacitor Bank Manual 105
10.1- Overview 105
10.2- Safety Notice for Using 106
10.3- Main Structures and Operating Principles 108
10.4- Technical Features 108
10.5- Size and Weight of Capacitor Bank 109

10.6- Installation and Commissioning 109
10.7- Utilization and Operation 116
10.8- Failure Analysis and Elimination 117
10.9- Proteciton 118
10.10- Maintenance and Repair 118
10.11- Transportation, Packaging and Storage 118
10.12- Unpacking and Inspection 122
10.13- Environmental Protection and Others 122

11. FSC MOV Manual 123
11.1- Usage of MOV 123
11.2- Environmental Operating Conditions 123
11.3- Model (Type) Description 123
11.4- MOV Unit Structure 124
11.5- Installation 124
11.6- Installation of MOV 125
11.7- Configuration and Installation Dimensions 126
11.8- Inspection and Maintenance 126
11.9- Acceptance and Preservation 127

12. FSC Spark GAP Manual 128
12.1- Usage of Spark GAP 128
12.2- Environmental Operating Conditions 128
12.3- Model (Type) Description 128
12.4- Structure and Working Principle of Spark GAP 129
12.5- Installation of Spark GAP 132
12.6- Inspection and Maintenance 138
12.7- Installation, Operation and Maintenance Notes 139
12.8- Attached graph 140

13. FSC By-pass Switch Manual 141
13.1- Reactive Power Compensation - Boosting Transmission Capacity 141
13.2- ABB By-pass Switch 143
13.3- Explanations and Definitions 144
13.4- Summary of ABB By-pass Switch Data 146
13.5- Operating Mechanisms 147
13.6- Testing and Inquiry Data 148

14. FSC Damping Reactor Manual 149
14.1- Notice 149
14.2- Installation Instruction 150
14.3- Instruction for Commissioning 165
14.4- On-site Test 167
14.5- Operating Information 167
14.6- Maintenance 168

15. FSC Toroid CT Manual 171
15.1- Toroid CT Description 171
15.2- Environmental Operating Conditions 171
15.3- Model (Type) Description 172
15.4- Toroid CT Structure 172
15.5- Main Performance Indicators of Toroid CT 173
15.6- Appearance and Installation dimensions 173
15.7- Installation, Operation and Maintenance Notes 174
15.8- Factory Documents 175

16. FSC Optical Fiber Column Manual 176
16.1- Usage of Optical Fiber Column 176
16.2- Environmental Operating Conditions 176
16.3- Model (Type) Description 176
16.4- Main Technical Indicators 177
16.5- Configuration and Installation Dimensions 177
16.6- Installation and Acceptance 178
16.7- Preservation 180
16.8- Inspection and Maintenance 180

17. FSC Control and Protection System Manual 181
17.1- General 181
17.2- Local Manitoring System 192
17.3- Protection Function 193
17.4- TFR Function 206
17.5- Platform Measurement Function 207
17.6- Measurement and Control Function 210
17.7- Hardware Description 213
17.8- Device Operation Description 243
17.9- Testing and Maintenance 243

17.10- Transportation and Installation Requirements 247
17.11- Appendix 248
17.12- Conclusion 251

18. FSC HV Equipments Operation and Maintenance Manual 252
18.1- Introduction 252
18.2- Operation and Monitoring 252
18.3- Equipment Maintenance 255
18.4- Appendix: Preventive Test Tables 265

19. FSC Capacitor Bank Inspection and Maintenance Manual 268
19.1- Introduction 268
19.2- Clearance and Grounding 268
19.3- Bulged Capacitor Units 269
19.4- Leaking from Capacitor Units 269
19.5- Re-Energization of the Capacitor Banks 270
19.6- Initial Inspection Measurements and Energization Procedures 270
19.7- Periodic Inspection, Measurement, and Maintenance 271
19.8- Visual Inspections 271
19.9- Physical Inspection and Measurements 272

20. FSC C&P System Operation and Maintenance Manual 273
20.1- Abbreviations 273
20.2- General 273
20.3- Local HMI 274
20.4- TFR HMI 289
20.5- HMI Device 302
20.6- Operation and Maintenance Notes 307

21. The Last Nınety Years of the FSC System and The Next Fıfty Years 313
21.1- Introduction 314
21.2- Power Capacitors 315
21.3- Series Capacitor Bank Protection 316
21.4- Thyristor Controlled Series Capacitors 320
21.4- The Next 50 Years 320
21.5- Summary 323
21.5- Referances 324

22. EMTA ENERGY 325
22.1- Energy Production 325

22.2- Overhead Transmission Line 326
22.3- AIS and GIS 327
22.4- Underground Power Cable 328
22.5- Energy Management 329
22.6- EMTA Service 330

23. SIEYUAN ELECTRIC 331

24. REFERANCES 332

EMTA Your solutions partner in transmission & distribution

As EMTA Group, since 1975 it has delivered more than 2000 MW product across 50 countries on 5 continents.

40 Years of Experince in Enegrg Sector

EMTA Energy provides integrated designing, engineering, procurement, construction supply and management services. These services extend to independent and national transmissionlines and substations as well as those associated with new power generation, Oil&Gas, Industrial facilities such as Textile, Cement, Pulp & Paper and many others. We have designed and commissioned more than 50 substations and 1000 kilometers of transmission lines.

For over 40 years, EMTA Energy has operated to become a reputable group of companies within the domestic and international power generation & transmission & distribution markets with its own strong financial structure and specialist workforce.

EMTA Energy is one of the most respected global engineering, procurment, and constraction companies.

Our company focusses on engineering a sustainable future, by providing turnkey solutions in Turkey and provides innovative design and Project management solutions to a global client base in a variety of process and energy industries that foster long-term progress and economic growth.

EMTA is strongly focused on serving the needs of international markets and is active in carrying out major power plant projects throughout Europe, theMiddle-East and Africa, with stronge emphasis on highly-efficient power plant construction technology.

Our core objective is to create added value for our customers by offering a “One Stop Shop” concept, which includes consulting, engineering, execution, commissioning, projectfinancing, built and operational services, spare part management and after-sales services under one contract. This gives our customers a strategic advantage to control their Project investment plan with the help of a reliable and experienced EMTA ENERGY team.

1- BASIC INFORMATION

1.1- What is the Capacitance?

When a charge is delivered to a conductor its potential is raised in proportion to the quantity of charge given to it. At a particular potential a conductor can hold a given amount of charge. Capacitance is the term to indicate the limited ability to hold charge by a conductor.

- Let charge given to a conductor be = "**q**"
- Let "**V**" be the potential to which it is raised.

Then q α V, or **q = CV**

C is constant for a conductor depending upon its shape size and surrounding medium. This constant is called **capacitance** of a conductor.

If V = 1 Volt than C = Q, thus capacitance is defined as the amount of electric charge in coulomb required to raise its potential by one volt.

If V = 1 Volt than C = Q, and Q = 1 Coulomb than C = 1 Farad thus one Farad is capacitance of a capacitor which stores a charge of one coulomb when a voltage of one volt is applied across its terminal.

1.2- What is the Capacitor?

A capacitor or condenser is a device for storing large quantity of electric charge. Though the capacity of a conductor to hold charge at a particular potential is limited, it can be increased artificially. Thus any arrangement for increasing the capacity of a conductor artificially is called a capacitor.

- Capacitors are of many types depending upon its shape, like parallel plate, spherical and cylindrical capacitors etc….
- In capacitor there are two conductors with equal and opposite charge say **+q and –q.** Thus q is called charge of capacitor and the potential difference is called potential of capacitor

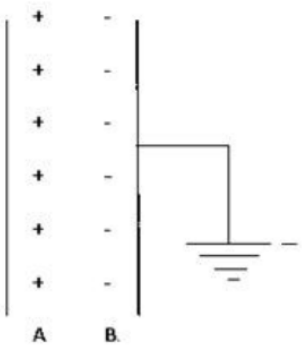

If a second conductor B is kept closed to A than electrostatic induction takes place. –q units of charge are induced on nearer face of B and +q units of charge is induced on farther face of B. Since B is earthed the charge +q will be neutralized by the flow of electrons from the earth.

Potential of A due to self charge = V

Potential of A due to –q charge on B = -V'

Thus net potential of A = V + (-V') = V -V' which is less than V

Hence potential of A has been decreased keeping the charge on it fixed, hence capacitance has been increased

With the presence of B the amount of work done in bringing a unit positive charge from infinity to conductor A decreases as there will be force of repulsion due to A and attraction due to B. Thus resultant **force of repulsion** is reduced on unit positive charge and consequently the amount of work doe is less and finally due to this potential of A decreases

Therefore capacity of A to hold charge (Capacitance) is increased

1.3- What is the Dielectric Strength?

The material between the two conductors A and B as shown in figure above is always some dielectric material. Under normal operating conditions the dielectric materials have a very few free electrons. If the electric field strength between a pair of charged plates is gradually increases, some of the electrons may be detached from the dielectric resulting in a small current.

When the electric filed strength applied to a dielectric exceeds a critical value, the insulating properties of the dielectric material gets destroys and starts conducting between the two conductors A and B.

This is called breakdown of dielectric which is fault condition for a capacitor bank. The minimum potential gradient required to cause such a break down is called the dielectric strength of the material. It measures the ability of a dielectric to withstand breakdown. It is expressed as kV/mm.

It is reduced by moisture, high temperature; aging etc. Below table gives dielectric strength of some dielectrics

Si.No.	Dielectric Material	Dielectric strength [kV/mm]
1	Air	3
2	Impregnated Paper	4 – 10
3	Paraffin Wax	8
4	Porcelain	9 – 20
5	Transformer Oil	13.5
6	Bakelite	20 – 25
7	Glass	50 – 120
8	Micanite	30
9	Mica	40 – 150

Dielectric Strength for capacitor is the maximum peak voltage that the capacitor is rated to withstand at room temperature. Test by applying the specified multiple of rated voltage for one minute through a current limiting resistance of 100 Ω per volt.

1.4- What is the Power Factor (PF) Correction?

The **Power Factor (PF) Correction** of electrical loads is a problem common to all industrial companies. Every user which utilizes electrical power to obtain work in various forms continuously asks the mains to supply a certain quantity of active power together with reactive power

Most loads on an electrical distribution system can be placed in one of three categories:

- **Resistive**
- **Inductive**
- **Capacitive**

The most common of these on modern systems is the **inductive load**.

Typical examples includes;

- transformer,
- fluorescent lighting,
- AC induction motors,
- Arc/induction, furnaces etc.

which draw not, only active power from the supply, but also inductive reactive power (KVAr). Common characteristics of these inductive loads is that they utilize a winding to produce an electromagnetic field which allows the motor or transformer to function and requires certain amount of electrical power in order to maintaining the field

"Therefore Active Power (KW) actually performs the work whereas Reactive Power (KVAr) sustains the electro-magnetic field. This reactive power though is necessary for the equipment to operate correctly but could be interpreted as an undesirable burden on the supply"

If we quantify power factor improvement aspect from the utility company's point of view, than raising the average operating power factor of the network from 0.7 to 0.9 means:

- Cutting costs due to ohmic losses in the network by 40%
- Increasing the potential of production and distribution plants by 30%.

These figures speak for themselves: it means saving hundreds of thousands of tons of fuel and making several power plants and hundreds of transformer rooms available.

Thus in the case of low power factors utility companies charge higher rates in order to cover the additional costs they must incur due to the inefficiency of the system that taps energy.

It is a well-known fact that electricity users relying on alternating current – with the exception of heating elements – absorb from the network not only the active energy they convert into mechanical

work, light, heat, etc. but also an inductive reactive energy whose main function is to activate the magnetic fields necessary for the functioning of electric machines.

Power Factor is also defined as cos Ø = kW / KVA

One can see after compensation requirement of kVAR (equal to kVAR1 – kVAR2) from the system has gone down.

Since kVA = kW + kVAR decreased kVAR requirement from the system has will result in decreased kVA requirement, which will consequently result in lower current consumption from the source.

Point to be noted in this case that any load which was operating at a power factor of 0.85 before compensation continues to operate on same power factor of 0.85 even after compensation. It is the source power factor which has been improved by compensating the kVAR requirement of that particular load (or group of loads) from parallel connected capacitor banks. The source is now relieved of providing some amount of **kVAR (=kVAR1 – kVAR2).**

COMPENSATED kVAR = kVAR1 – kVAR2 = kW tanØ1 – tan Ø2 = kW [tanØ1 – tan Ø2]

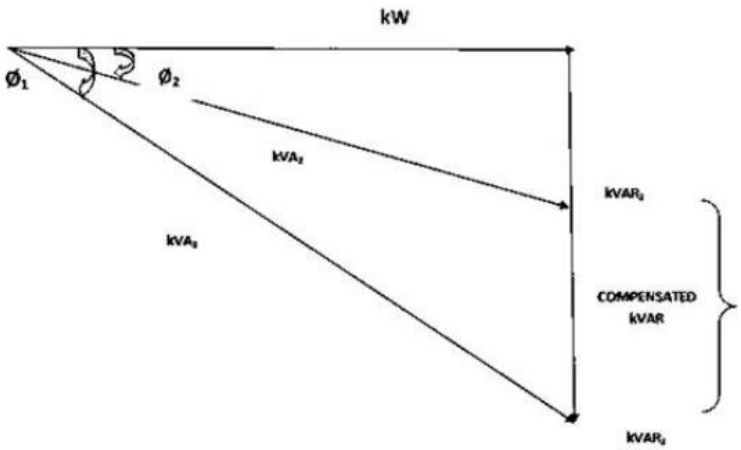

Power Factor Triangle

Hence Required Rating of Capacitor banks to be connected = **kW [tanØ1 – tan Ø2]**

Where,

cos Ø1 = Operating Power Factor

cos Ø2 = Target Power Factor or Power Factor after improvement

2- INTRODUCTION TO FSC

Fixed Series Compensation Systems **(FSC)** are installed **to reach a more efficient use of the transmission lines.** The diversification of generation, transmission and distribution, in additon to long transmission distances and large generating power plants are resulting in an increased demand for economic and reliable operation of transmission systems. The demand for increasing power transfer means either more transmission lines or compensantion of the existing lines. At this point, **series compensation is one of the most economical ways to improve the power transmission capacity of lines.**

The cost of series compensation system is **approximately 10%** of the cost a new transmission line.

Thus, the payback time for the series compensation system investment is only a few years.

Fixed Series Compensation (FSC) will:

- increase power transmission capability,
- improve system stability,
- reduce system losses,
- improve voltage profile of the lines,
- optimize power flow between parallel lines.

In the Fixed Series Compensation, **quality** is the result of a comprehensive engineering design and fully optimized delivery. Testing the equipment to the best required standards brings a final touch to delivery, this proves that the design can perform under reliable conditions.

In countries such as Brazil, Finland, Canada and China, where have large cities with large land area are located, electricity; It is distributed to customers with high voltage transmission lines (EHV lines). The fixed series compensation system is used to compensate **the Inductive Reactance** of the transmission line in the HV (High Voltage) and EHV (Extra High Voltage) transmission lines.

AC transmission lines are not designed to control voltage and current easily and quickly; this causes problems with dynamic balance, balance stability and power transmission capacity.

Testing of Series Compensation Equipment

The advantage of series compensation is **that compensates the line automatically and the compensation power changes according to the line current.** Serial Compensation generates reactive power when there is even current. Reactive power will increase power transfer capacity and stabilize the system.

The transmission system (**transmission line distances, short circuit power, compensation degree, stability requirements, etc.**) determines the main system data and is then verified by detailed system and equipment operations.

During and after the production of the equipment of the Series Compensation System, different sub-equipment is **routinely type-tested.**

In full delivery, the only way to understand whether the specifications are fulfilled is that to make a full scale type test and compare the results with the design and simulations of Fixed Serial Compensation. Full scale type tests **(FAT)** are performed in the laboratory environment (**in factory conditions**) or **in the field where the installation is carried out (SAT)** to verify the appropriate structure for the constructed Series Compensation.

Thanks so much for listening to me patiently ☺

In the light of the basic information we provide about Fixed Series Compensation (FSC) System, we would like to give some information about **the Project of ITM 222 KAYSERİ SERIES CAPACITOR BANK ADDITION**, which we realized as EMTA Energy.

3- KAYSERI CAPACITOR BANK PROJECT BASICS - 420kV/396MVar/2000A

3.1- Introduction

The Compensation System we have installed is: **500kV and less Fixed Series Compensation Device (FSC).**

FSC: 420kV Voltage, 396MVar, 2000A load carrying capacity and is designed for 50HZ frequency.

FSC is connected to Gölbaşı North and South transmission lines in order to compensate for the inductive reactance of long lines. **These transmission lines are equipped by FSC to increase system transmission capacity, improve system voltage quality and reduce transmission loss.**

FSC device (for each platform);

- Galvanized Steel Platform,
- Platform Support System,
- Capacitor Banks (total 200 units)
- Metal Oxide Varistor (MOV, 10 units)
- Spark Gap (G1 and G2),
- Damping device (Damping Resistor and Damping Reactor),
- Unbalance Current Transformer
- Toroid Current Transformers (Total 9 pcs)
- Bypass Circuit Breaker (one phase pole for each platform),
- Serial and Bypass Disconnectors (2 series, 1 bypass),
- Earth Disconnectors,
- Protection and Control System,
- It consists of Automation System and Fiber Optic Communication Infrastructure.

3.2- Project Basic Information

The degree of SC located in KAYSERI substation, as shown in Figure-1, are both **38%**. The figure shows part of the grid retained for calculating the equivalent circuit.

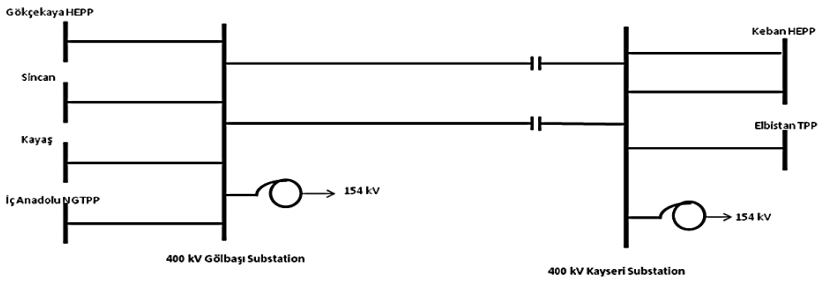

Figure 1: ***Locations of FSC of KAYSERI System***

3.3- The Main Parmeters:

Parameters	Value
Reated Reactance (Ω/faz)	33
Reated Current (Arms)	2000
Three-phase Reactive Power Capacity (Mvar)	396
Capacitance (µF/faz)	96.46
Compensation degree	38%

3.4- Main Circuit Scheme of FCS

The primary equipment of SC delivered to the site includes series capacitor bank units, **MOV**, **spark GAP**, **Damping device** (damping reactor&damping resistor), **Bypass switch** (bypass breaker), etc.

The main circuit scheme of FSC is shown in **Figure** 2.

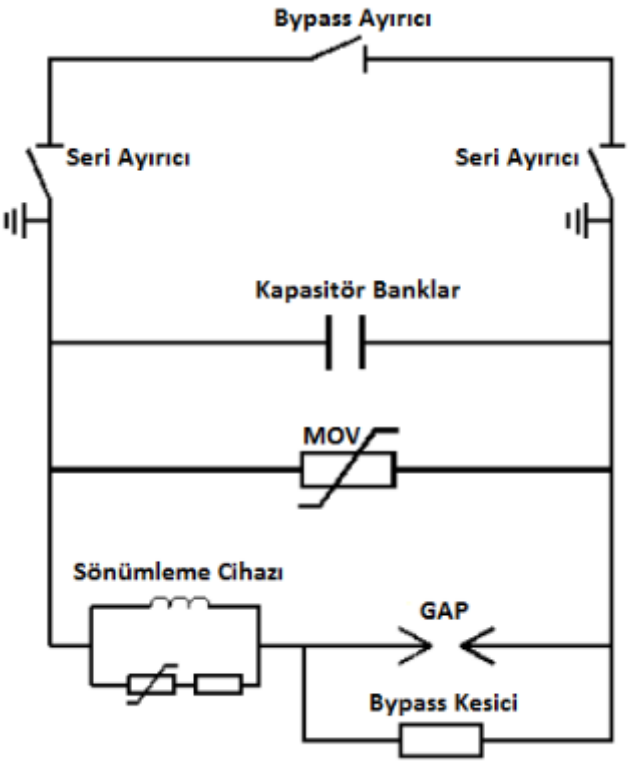

*Figure 2: **Main circuit scheme of FSC System***

3.5- Fault Sequence and Duty Cycle:

Fault sequence of power system lie in the **three points** below:

1) 100 ms maximum normal fault clearing time
2) 1500 ms dead time
3) 240ms spare Protection failure clearing period (one phase breaker failure in multiple fault)

The external fault duty cycle of FSC:

Time (ms)	Power System Events	SC Duty Cycle
0	External fault occurs.	
0 to 100	Fault remains.	MOV withstands the fault and limits the voltage across the capacitor banks. Spark gap and bypass breaker are not permitted to bypass the capacitor banks.
100	Line circuit breakers clear the fault.	
100 to 1600	The line is tripped.	Current flows through the capacitor banks.
1600	Line circuit breakers reclose without clearance of the fault.	
1600 to 1600+100	Fault remains.	MOV withstands the duty associated with the fault and accumulates energy. Spark gap and bypass breaker are not permitted to bypass the series capacitor banks.
1700	Line circuit breakers clear the fault.	MOV stops conducting as the voltage across the series capacitor banks decreases.

The internal fault duty cycle of FSC:

Time (ms)	Power System Events	SC Duty Cycle
0	Fault occurs.	
0-100	Fault continues.	MOV withstands the duty associated with the fault. Spark gap and bypass breaker may bypass the series capacitor banks.
100	Line circuit breakers open.	
After 100ms	Line breakers keep opening.	

On energy transmission lines, when series capacitor bank exists, single phase or 3-phase re closing shall not be allowed.

3.6- Electrical primary technical requirement drawing

Single Line Diagram:

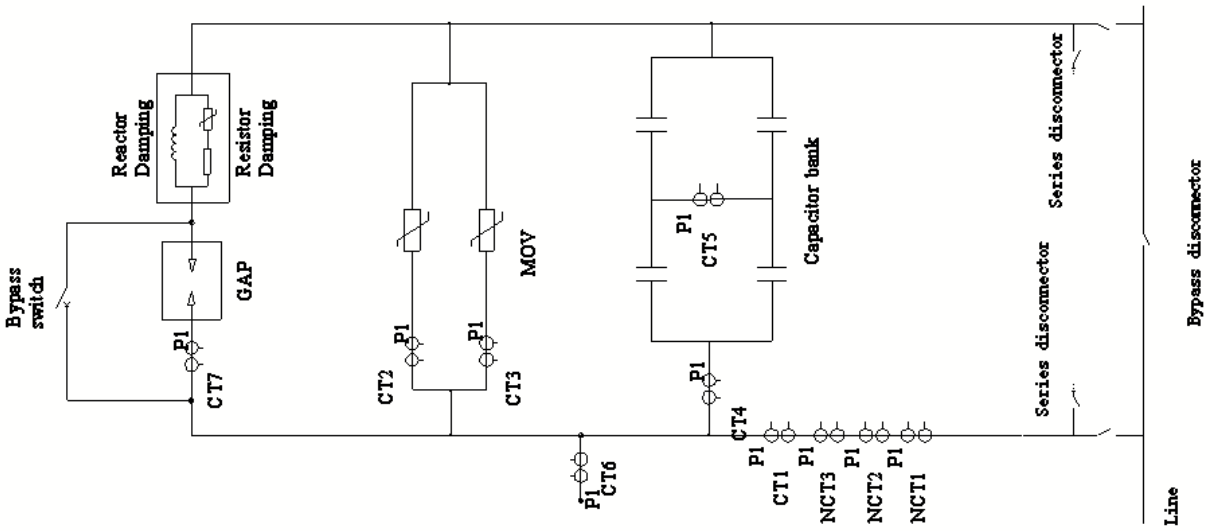

3.7- Layout of one phase platform:

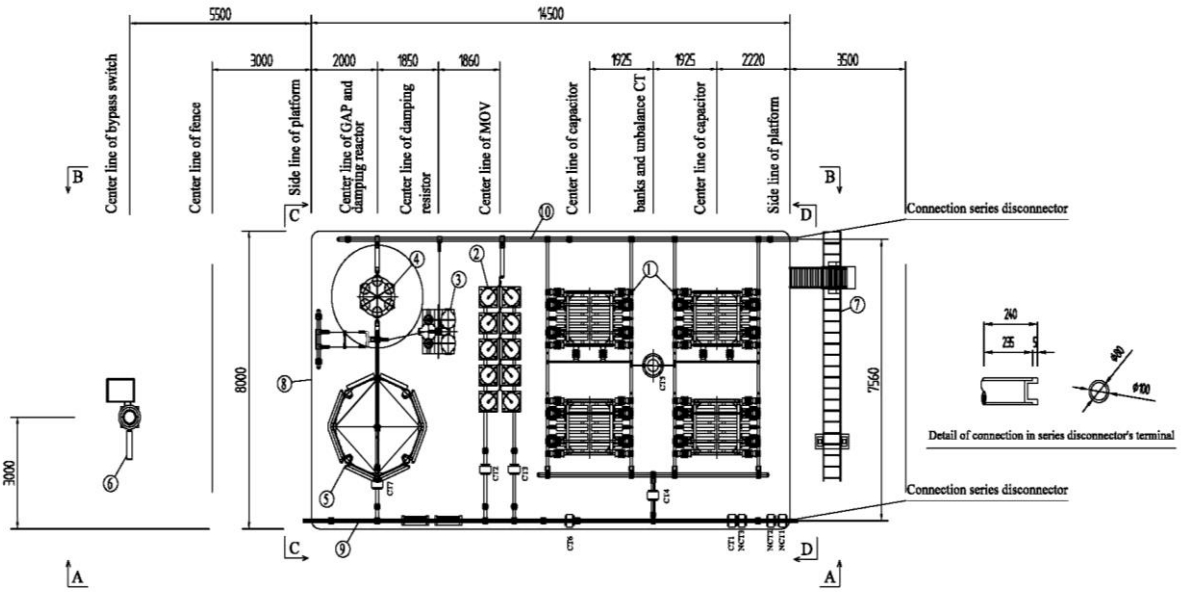

3.8- Section view of one phase platform:

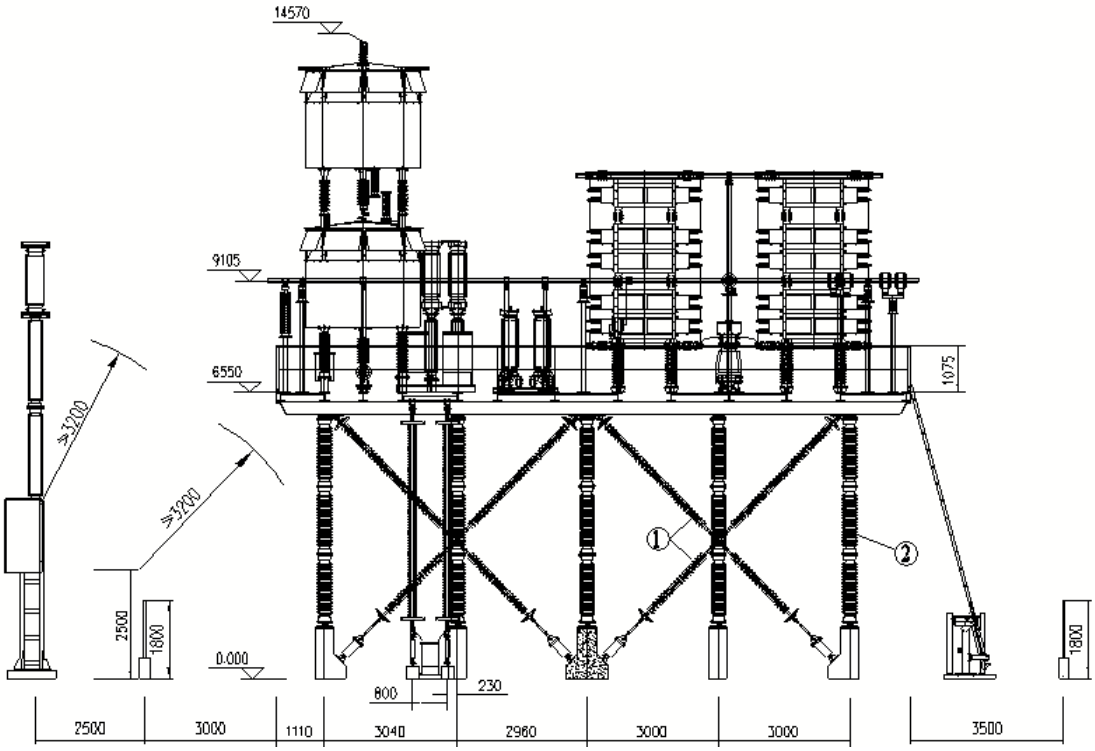

3.9- Total layout of FSC cabinet:

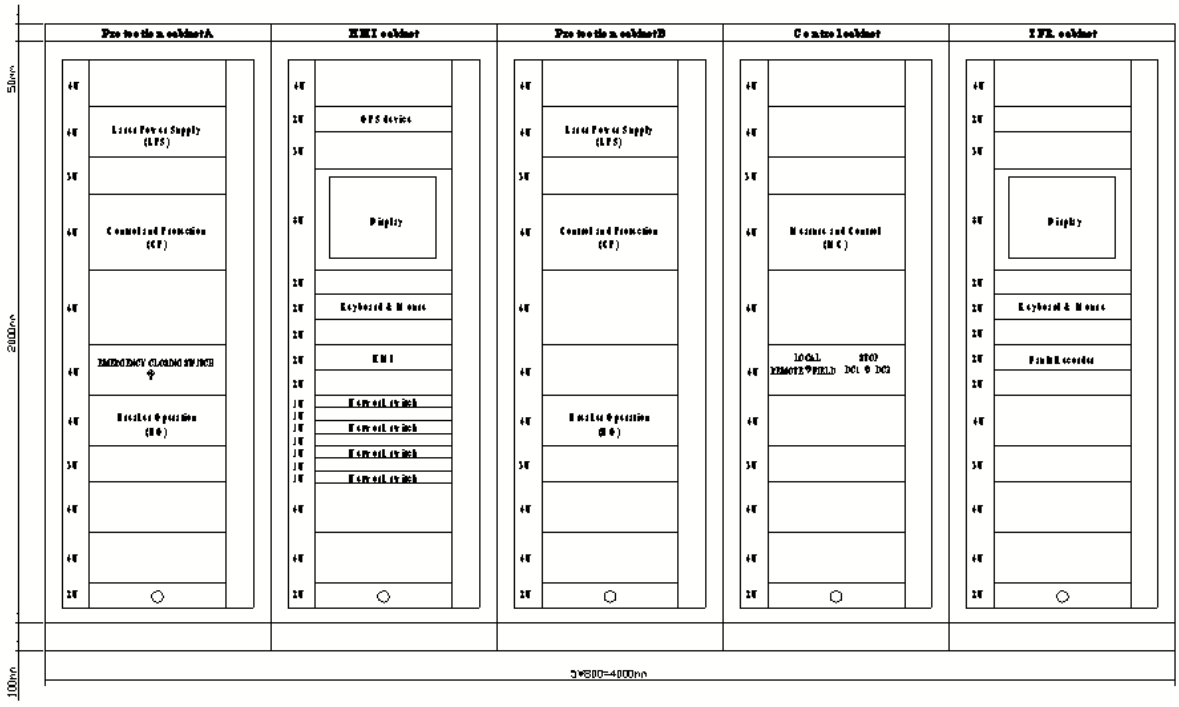

3.10- Monitoring and control system diagram:

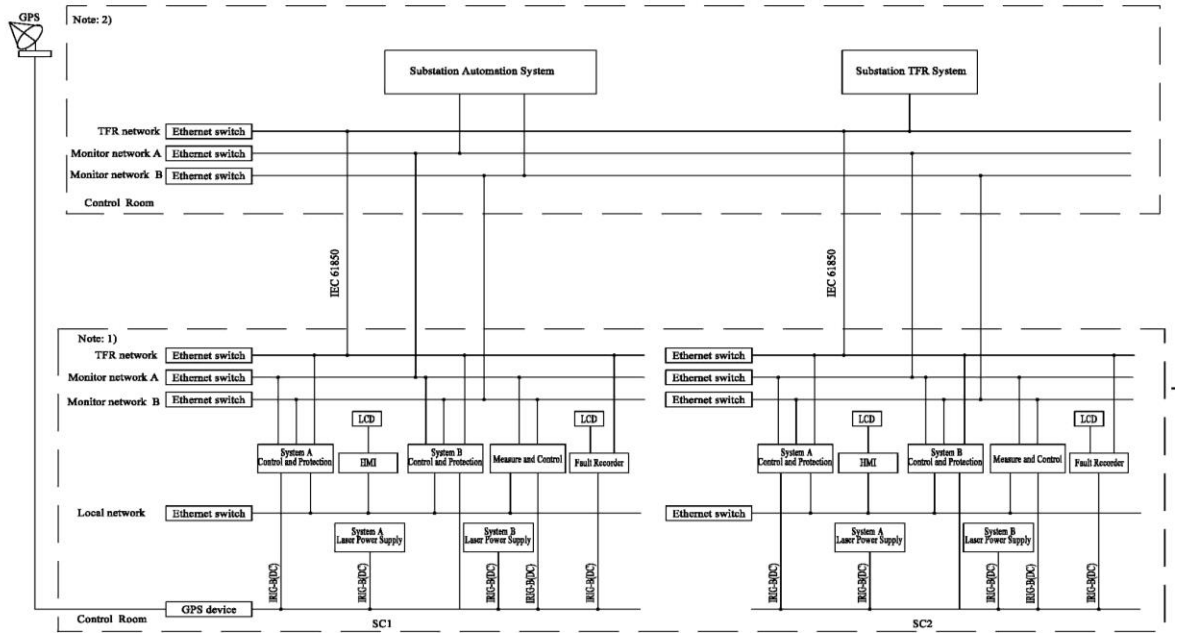

3.11- Protection Configuration Diagram:

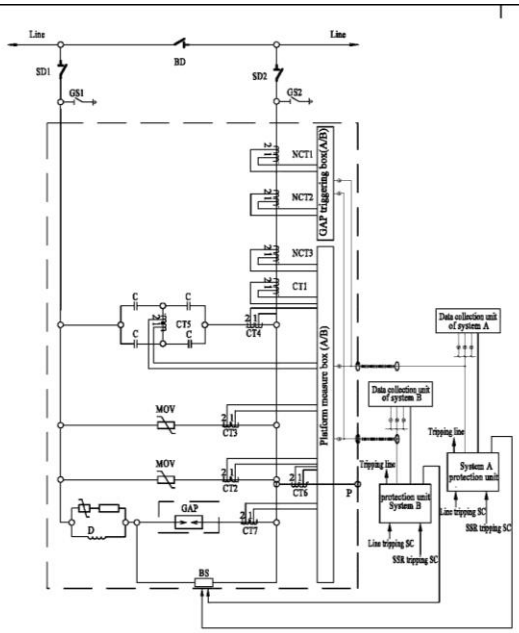

Protection function	Option of output								
	SOE	RECORD	BS	PERM	TEMP	GAP	LINE	LED	SB
Capacitor overload protection	x	x	x	x	x			x	x
Capacitor overload alarm	x	x						x	x
Capacitor unbalance low-setting protection	x	x	x	x				x	x
Capacitor unbalance high-setting protection	x	x	x	x				x	x
Capacitor unbalance alarm	x	x						x	x
MOV over-current protection	x	x	x		x	x		x	x
MOV energy low-setting protection	x	x	x		x	x		x	x
MOV energy high-setting protection	x	x	x	x		x		x	x
MOV temperature protection	x	x	x		x	x		x	x
MOV unbalance protection	x	x	x	x		x		x	x
GAP self-triggering protection	x	x	x	x	x			x	x
GAP trigger-refusing protection	x	x	x	x				x	x
GAP delay triggering protection	x	x	x	x				x	x
Line tripping SC protection	x	x	x		x	x		x	x
Platform flashover protection	x	x	x	x				x	x
BS fail-to-close protection	x	x	x	x			x	x	x
BS fail-to-close alarm	x	x						x	x
BS fail-to-open protection	x	x	x	x				x	x
BS phase disagreement protection	x	x	x	x				x	x
SSR protection	x	x	x	x	x			x	x
SSR alarm	x	x						x	x
Line current monitoring	x	x						x	x

Notes:

1)

Code	Name
BD	Bypass disconnector
SD1,SD2	Series disconnector
GS1,GS2,	Grounding switch
BS	Bypass switch
P	Platform
C	Capacitor banks
MOV	MOV metal oxide varistor
D	Damping resistor and reactor
GAP	Spark GAP
CT	Current transformer

2) "Option of output" explains:

a)SOE: sent the reports of SOE to HMI or monitoring system.
b)RECORD: record the waves of analog and switching value.
c)BS: order BS(bypass switch) closing.
d)PERM: permanently lockout insertion of SC.
e)TEMP: temporarily lockout insertion of SC.
f)GAP: order GAP triggering.
g)LINE: order line tripping.
h)LED: order LED lighting.
i)SB: order signal board lighting.

3.12- Protection System Schematic Diagram:

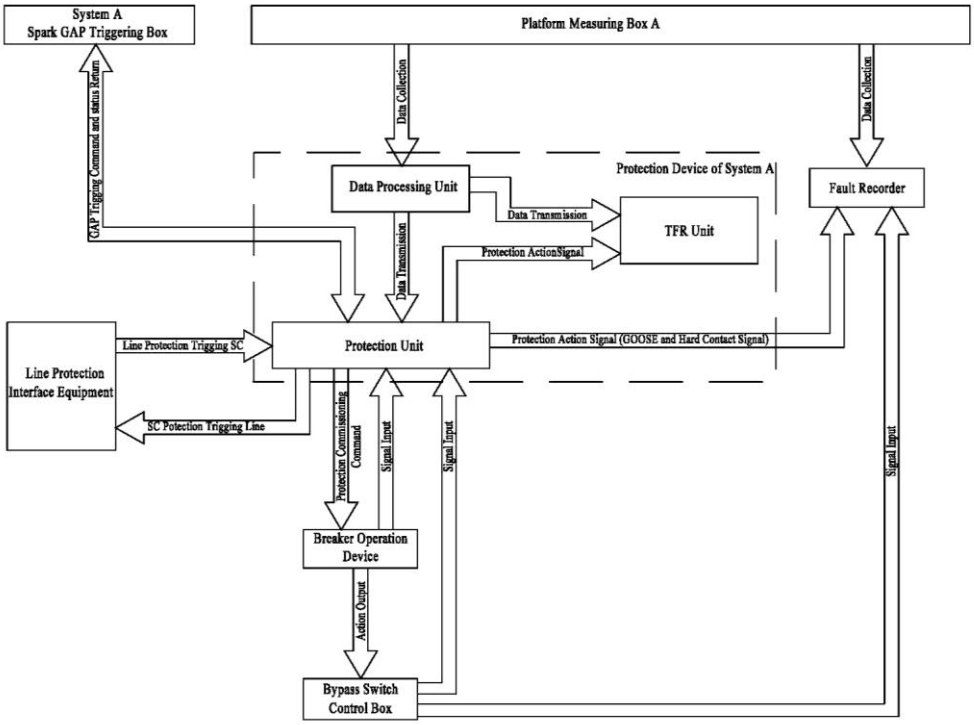

3.13- Measure System Schematic Diagram:

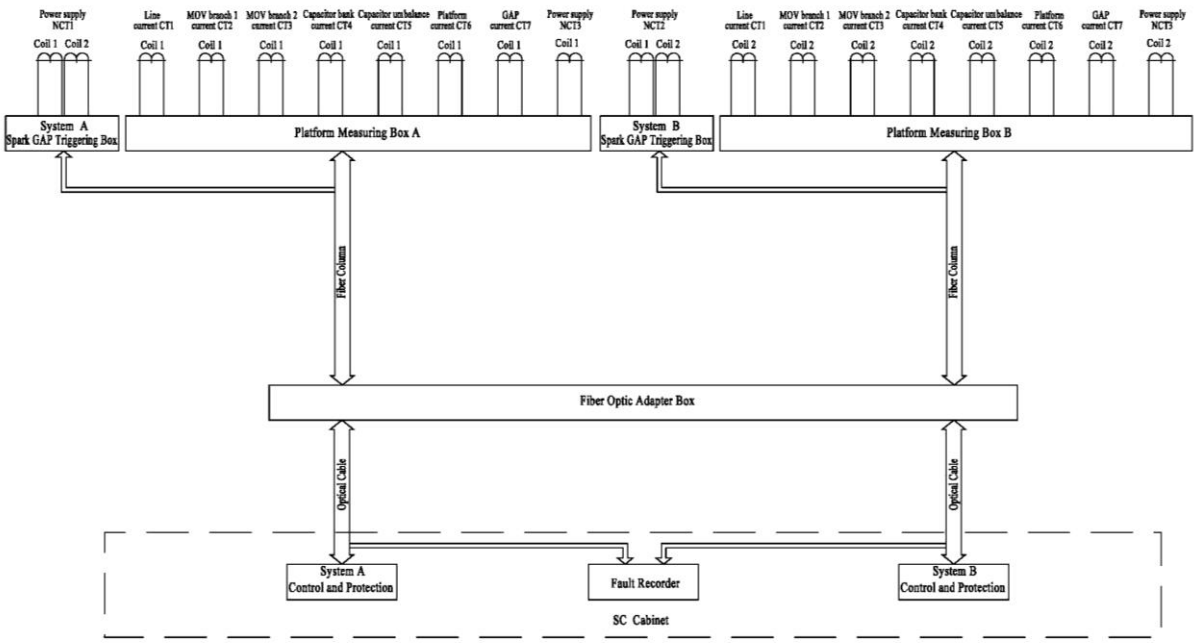

3.14- Control System Schematic Diagram:

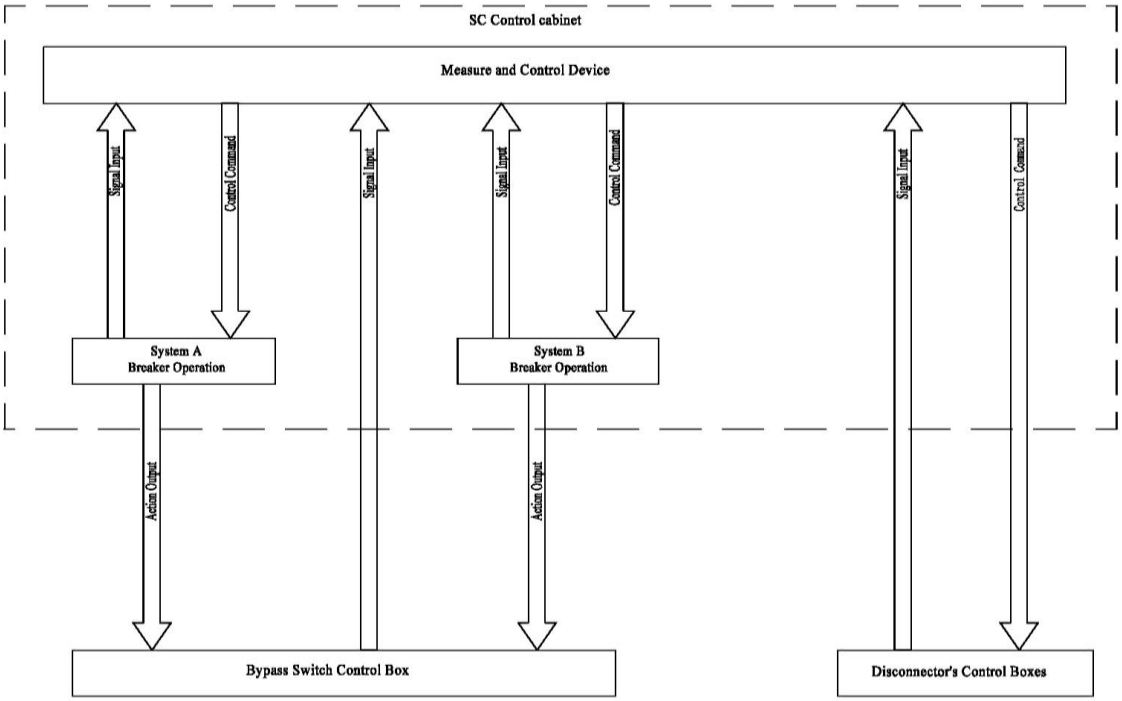

3.15- Blocking Logic Diagram:

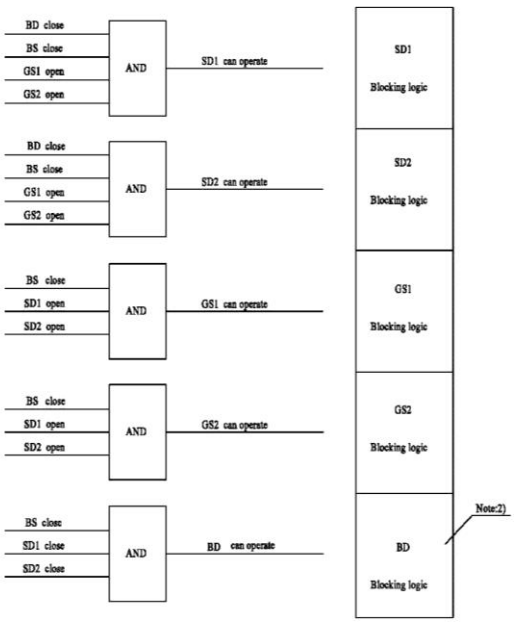

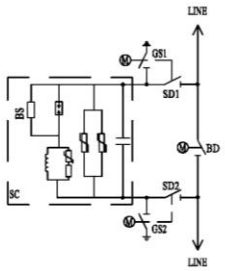

SC Blocking logic table

Blocking logic	SC					
	BD	BS	SD1	SD2	GS1	GS2
BD can operate		1	1	1		
SD1 can operate	1	1			0	0
SD2 can operate	1	1			0	0
GS1 can operate		1	0	0		
GS2 can operate		1	0	0		
BS can operate						

Note:
1)."1"="close status";"0"="open status.
2).The blocking logic about BD is only considered for SC, not for the overall line.
3).The blocking logic about BD is considered by design institute and the buyer.

3.16- Foundation Layout of FSC

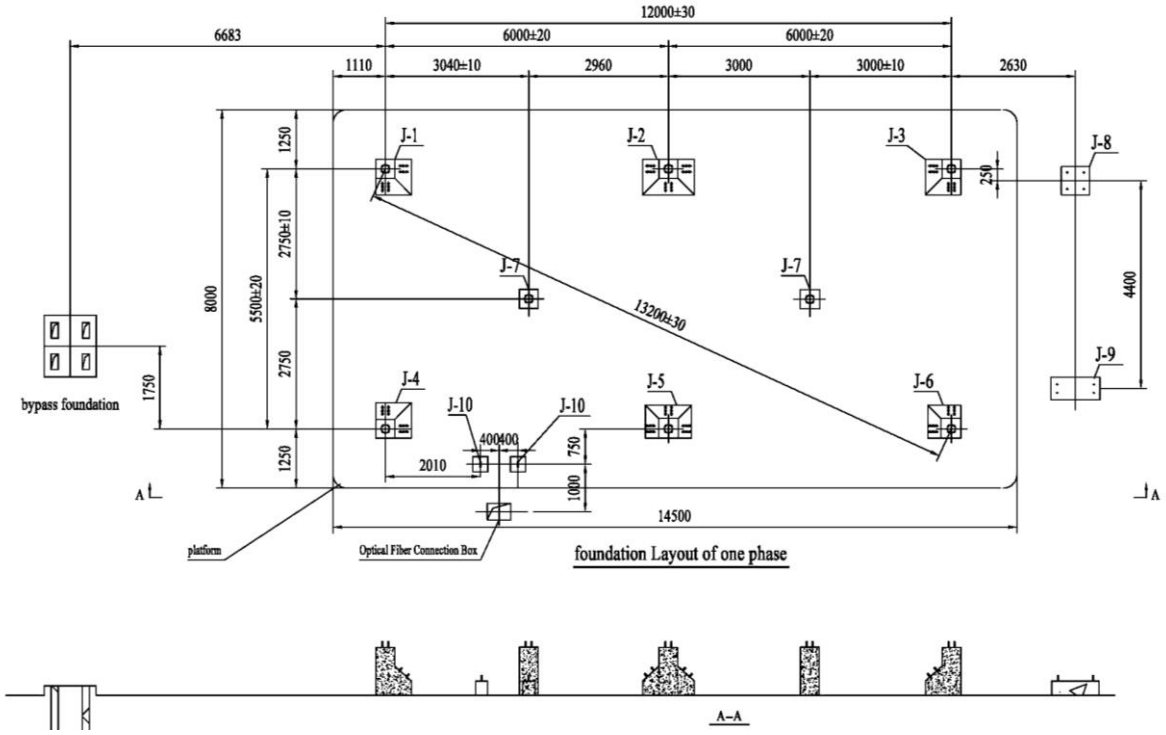

4- Training Series of FSC Engineering-1

Introduction of FSC

- **FSC:** Fixed Series Compensation
- **TCSC:** Thyristor-Controlled Series Compensation

4.1- Introduction

4.1.1- Basic Principle of FSC:

Fixed Series Compensation (FSC) consists of capacitors which are placed in series with a transmission line. The negative reactance of these capacitors is used to cancel a part of the normal inductive reactance of the line and results in a reduction of the net series impedance of that line. Typically, series compensation lies in the range of 30 to 70 percent.

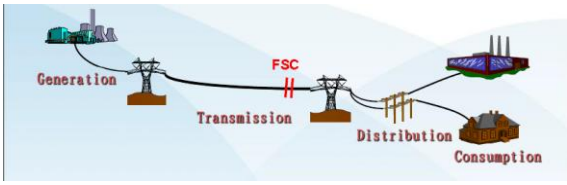

4.1.2- Functions of FSC:

- The FSC technology, is an attractive and cost-effective method for grid reinforcement and optimization.
- Increased Power Transfer Capability
- Improved system stability
- Control of power flow
- Avoid new transmission line construction
- Improved voltage regulation
- Economical to apply, widely used

4.1.3- Main Components of FSC:

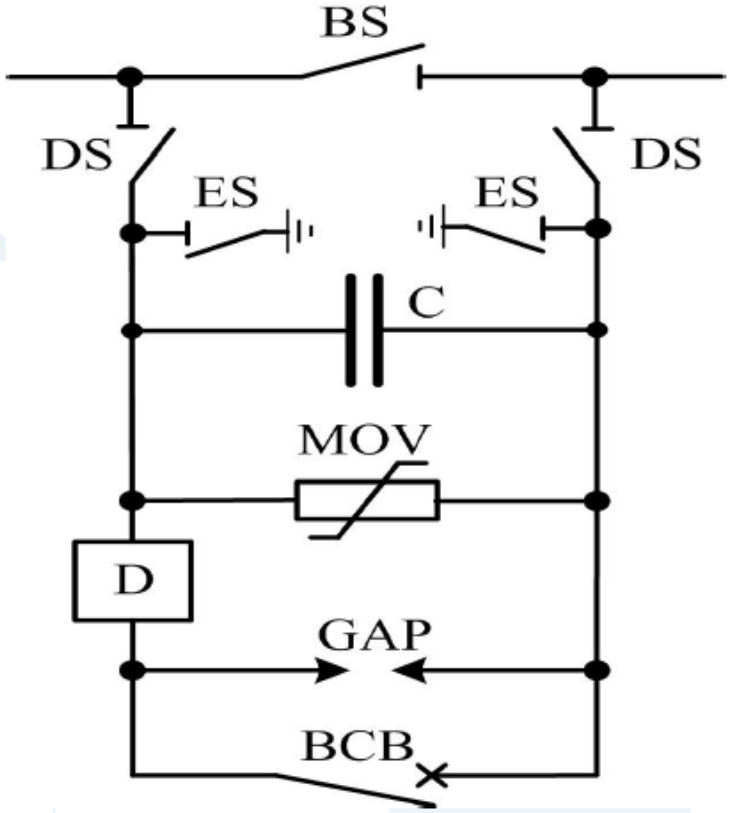

4.1.4- FSC Control and Protection System:

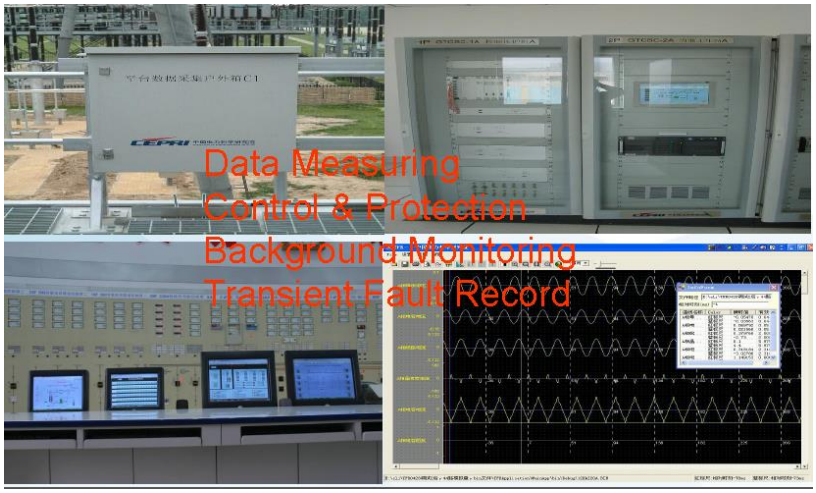

- **Data Measuring,**
- **Control and Protection,**
- **Background Monitoring,**
- **Transient Fault Record (TFR)**

4.1.4.1- Characteristics of CEPRI Control and Protection:

- Dual-redundancy configuration;
- Self-diagnose ability;
- Good expansibility and compatibility;
- Excellent reliability.

4.1.4.2- Protection Specifications:

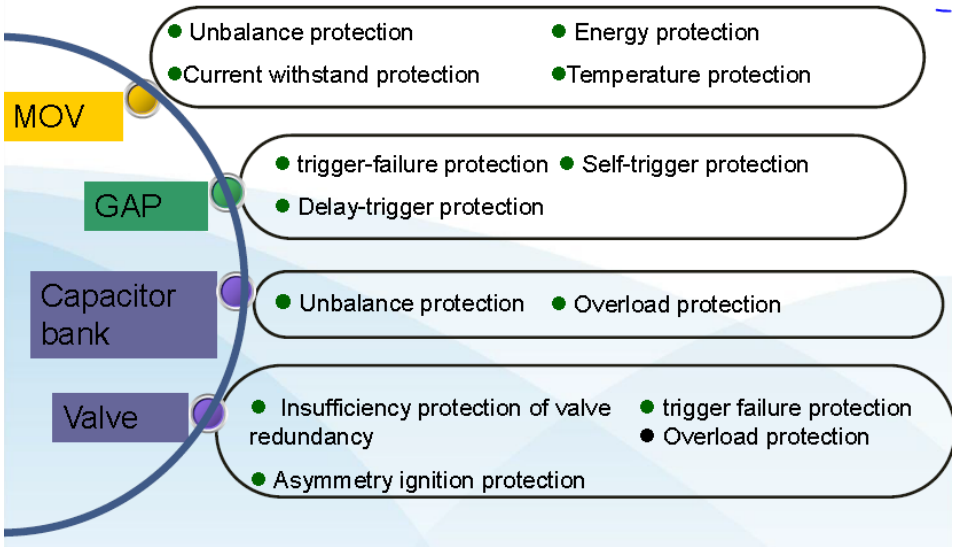

4.2- FSC Projects:

1. 500kV FSC in Sanbo, Xuzhou (July, 2006)

Figure 3: First set of 500kV FSC by CEPRI.

Technical Data in 500kV FSC in Sanbo:

System Voltage	**500 – 550 kV**
System Frequency	**50 Hz**
Rated Current (RMS)	**2360 A**
Reactive Power Capacity (Three-phase)	**529 Mvar**
Capacitor Protective Scheme	**MOV, Spark GAP**
MOV Energy Consumption	**144 MJ**
Line Compensation Degree	**41.4%**
Protection Level	**2.3 p.u (FSC)**
Sets	**1**
Delivery Date	**Temmuz 2006**

2. SGCC UHV AC Pilot Demonstration Project Jin Expansion Project (12,2011)

Figure 4: The world's first UHV series compensation(SC) project

Technical Data in 1000kV Jin Expansion Project:

Items	Chang nan I, Chang zhi side	Chang nan I, Nan yang side	Nan jin I, Nan Yang side
Compensation degree	**20%**	**20%**	**20%x 2**
Rated Capacitance (Ω)	**19.38**	**19.38**	**14.77x2**
Rated Current (A, rms)	**5080**	**5080**	**5080**
Rated Voltage (V, rms)	**98.4**	**98.4**	**75.0x2**
Rated Capacity/3Phases (Mvar)	**1500**	**1500**	**1144x2**

3. UHV Chengde Project (July 2016)

4. Two sets of 220kV FSC in Laocai, Vietnam (May 2007)

Figure 5: First oversea FSC by CEPRI

5. 500kV FSC of GDHA project, Ethiopia (January 2016)

Figure 6: biggest single installed capacity in the world

6. Two sets of 500kV FSC in Paranatinga, Brazil (November 2016)

4.3- Introduction of TCSC

4.6.1- Basic Principle of TCSC:

- TCSC is composed of capacitor and thyristor-controlled reactor (TCR branch), and its **equivalent fundamental impedance** is determined by a constant capacitive reactance and a variable inductive reactance connected in parallel.

- Equivalent fundamental impedance is adjusted by **controlling the trigger angle of thyristor valve.**

4.6.2- The basic structure of TCSC:

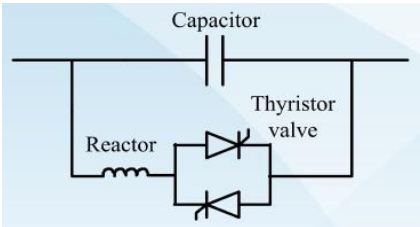

4.6.3- Functions of TCSC:

- Adjust compensation degree quickly and continuously
- Control load flow dynamically
- POD (Power oscillation damping)
- SSR mitigation
- Improve system voltage stability
- Reduce the short-circuit current
- Improve system transient stability

4.6.4- Work mode of TCSC:

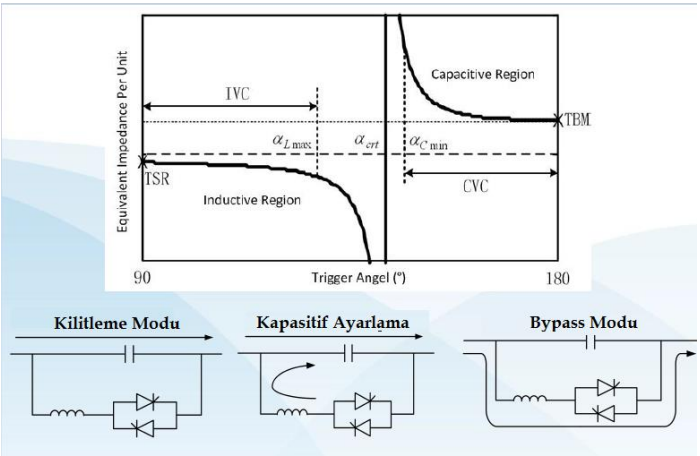

4.6.5- Main equipments of TCSC:

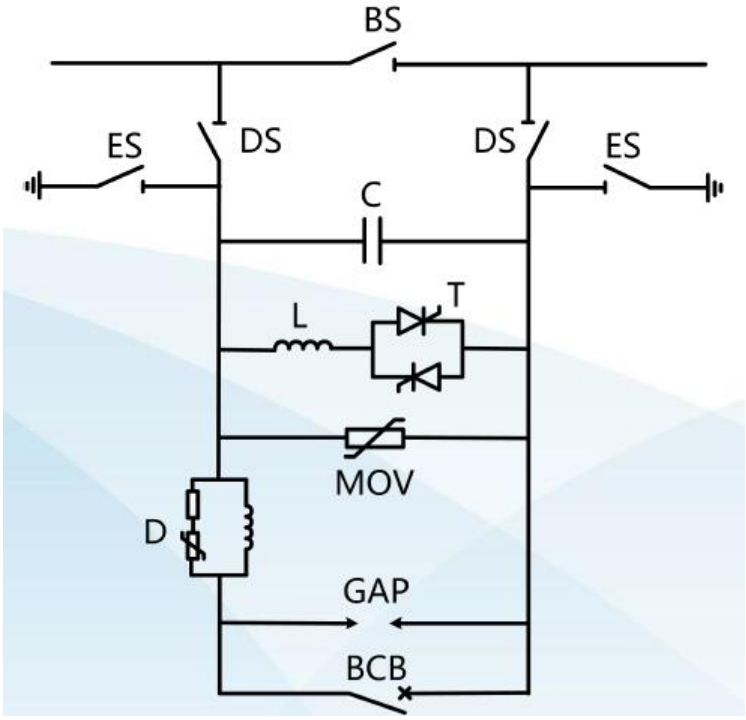

4.6.6- Introduction of TCSC:

- The relationship between compensation effect and compensation degree is not linear. when the compensation degree exceeds a certain value, the compensation effect will become worse, especially over 70%;

- When the compensation degree is too large, the SSR damping effect of TCSC will be decreased;

- The TCSC device is often used together with FSC, which is mainly to reduce the cost of whole device, as well as to get a wide range of impedance.

4.4- TCSC Projects

1. Cheng-Bi 220kV TCSC project in Gansu province

Figure 7: First home-made TCSC in China

Efects:

- **Saving infrastructure investment.** Comparing with constructing a new 220kV transmission, installing TCSC can save 100 million yuan.
- Increased income from electricity sales. **The transient stability limit of Zaocheng line is 245MW without FSC, and 310MW with FSC, and 380MW with TCSC. The transmission power is 120MW more than which without TCSC.** And it can be 421 million KWh more in flood season. The annual income from electricity sales will increase 120 million yuan (including tax) on the average price about 0.285yuan per KWh.
- Improve voltage quality in Bikou area. The voltage of Bikou can be improved by 3-4kV when TCSC applied.
- Reduce the damage to the ecological environment

2. Yi-Feng 500kV TCSC project in Heilongjiang province

- First 500kV TCSC by CEPRI,
- One of the biggest capacity and highest rate voltage TCSC projects in the world
- The original installed capacity of Yimin Power Plant is 2 ×500MW. New 2×600MW unit would be put into operation by theend of 2007 .
- The transmission capacity of Yi-Feng line should be increased in order to send the adding power from Yimin Generator unit.
- A mixture system with AC and DC transmission line in Hulunbeier area would be formed in 2010.

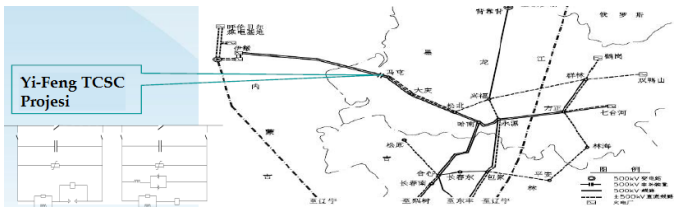

Efects:

- The limit transport capacity of Yifeng double line is 2000MW by installing TCSC at Fengtun substation, which can meet the requirement of the full output of Yimin Generator units;
- Increase transmission capacity of Yi-Feng line by about 600MW
- effectively avoid the risk of sub-synchronous resonance, significantly improve the transient stability level and low frequency power oscillation damping ability;
- The construction investment is saved and the ecological environment is protected by applying TCSC instead of constructing new transmission corridors through Greater Xing'an Mountains.

5- Training Series of FSC Engineering-2

FSC Basic Design

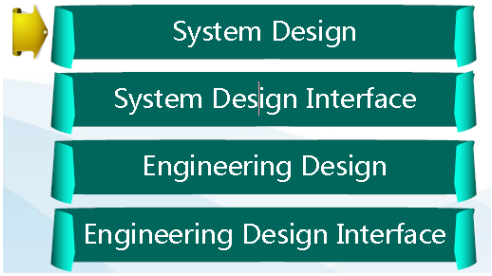

5.1- System Design

5.1.1- Data for System Design:

- Single line diagram
- Generator parameters
- Transformer parameters
- Line and shunt reactor parameters
- Fault duty cycle
- Basic parameters of capacitor
- Rated current of series compensation
- Swing current

5.1.2- System Calculation Report:

- Main Circuit;
- Protection Level;
- MOV Parameters;
- Damping Circuit Parameters;
- Protection Setting Values.

5.1.3- System Design Process:

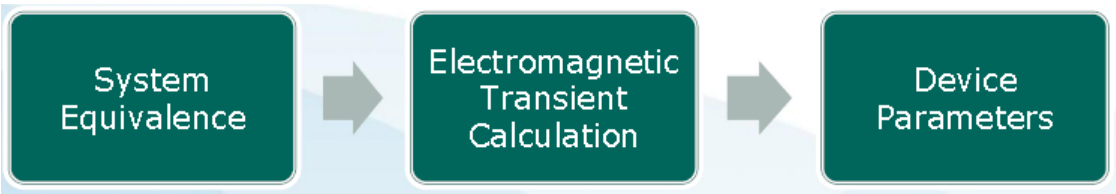

5.1.4- System Equivalence:

Definition: By reducing the size of the original large system, the system model can be used for electromagnetic transient calculation.
Method: Static equivalence is implemented by software, such as BPA, PSASP and PSS/E.

5.1.5- Methods Electromagnetic Transient Calculation:

- ATP / EMTP or PSCAD
- Statistical analysis method
- Several thousand simulation calculations.

5.1.6- Contents of Electromagnetic Transient Calculation:

- **External Fault:** External faults are scanned to determine the setting values for triggering spark gap.
- **Internal Fault:** Internal faults are scanned to determine the Energy absorption of MOV and its design.
- **Capacitor Discharge: To calculate the current through capacitor**, GAP and bypass switch when GAP or bypass switch close, and **the damping circuit scheme** is tested at the same time.

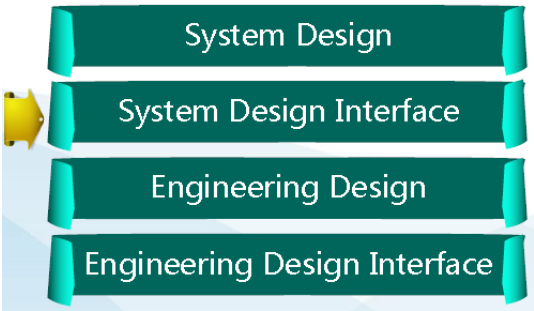

5.2- System Design Interface

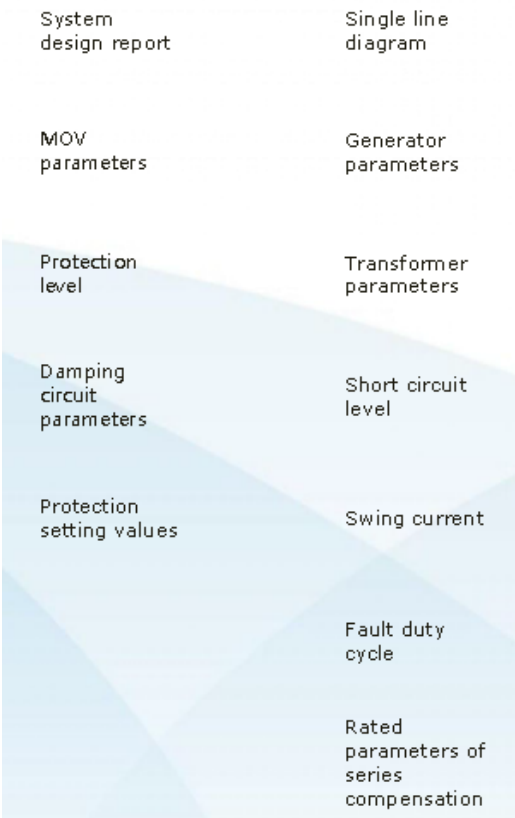

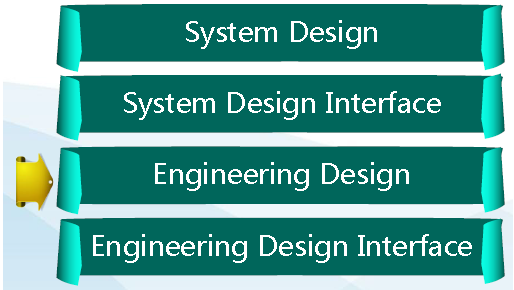

5.3- Engineering Design

5.3.1- Engineering Design Purpose:

The series compensator is a kind of engineering customized power equipment, which needs to be designed according to the system and environment conditions of the installation site.
The purpose of engineering design is to design project customization under the guidance of system design, combined with Project location and parameter requirements.

5.3.2- Progress classification and data requirements:

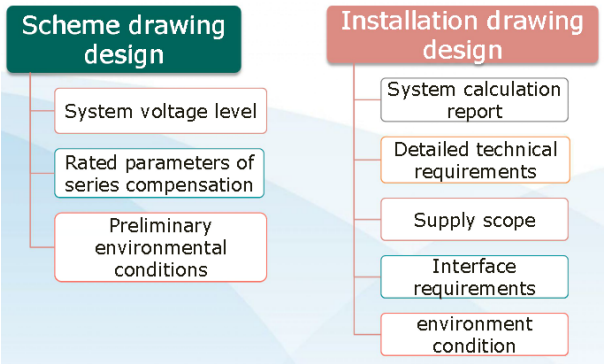

5.3.3- Professional classification:

- **Primary Equipment:** Arrangement of equipment on the platform and switch equipment
- **Secondary Equipment:** Detailed design of protection & control system, logic and power supply
- **Civil Structure:** Design and mechanical analysis of the platform.

5.3.3.1- Primary Equipment - Plat form Size:

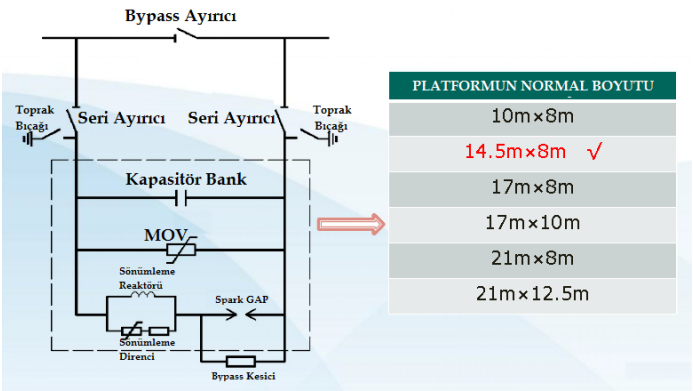

5.3.3.2- Primary Equipment - Arrangement of series compensator:

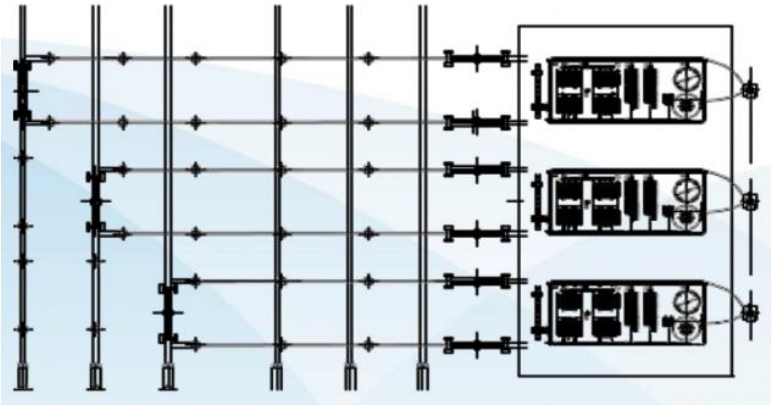

5.3.3.3- Primary Equipment - Ground Fence

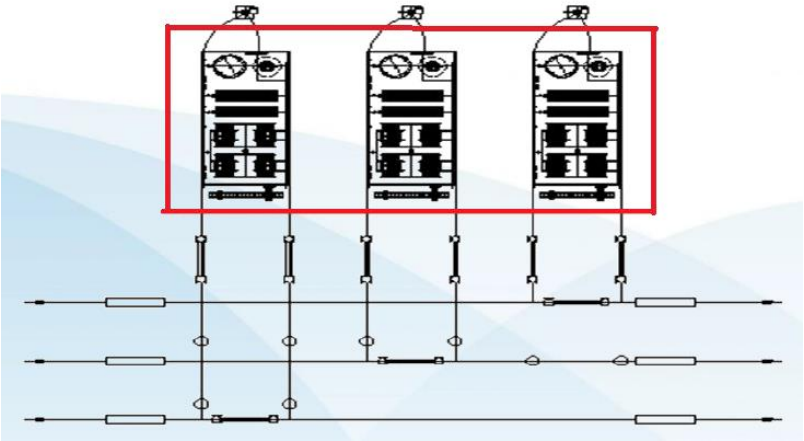

5.3.3.4- Secondary Equipment - Cabinet Layout:

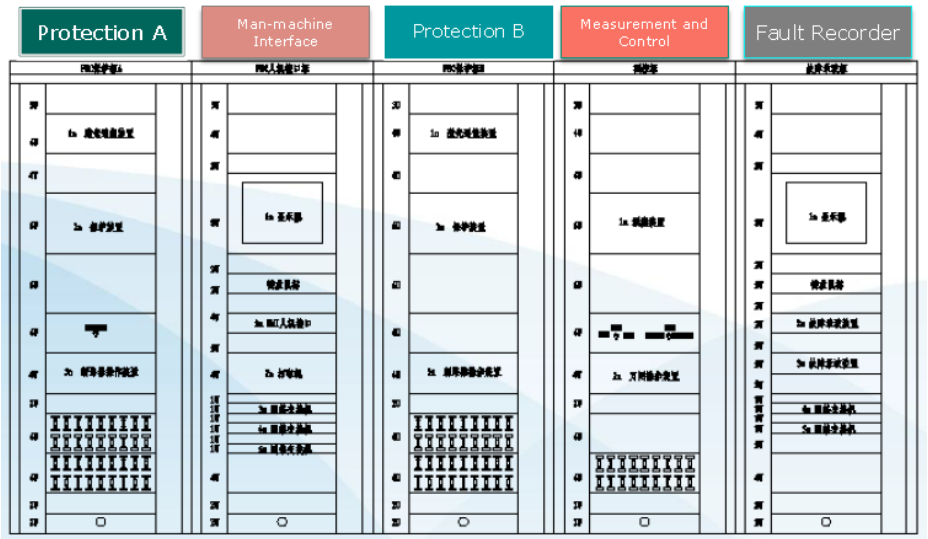

5.3.3.5- Secondary Equipment - Monitoring system:

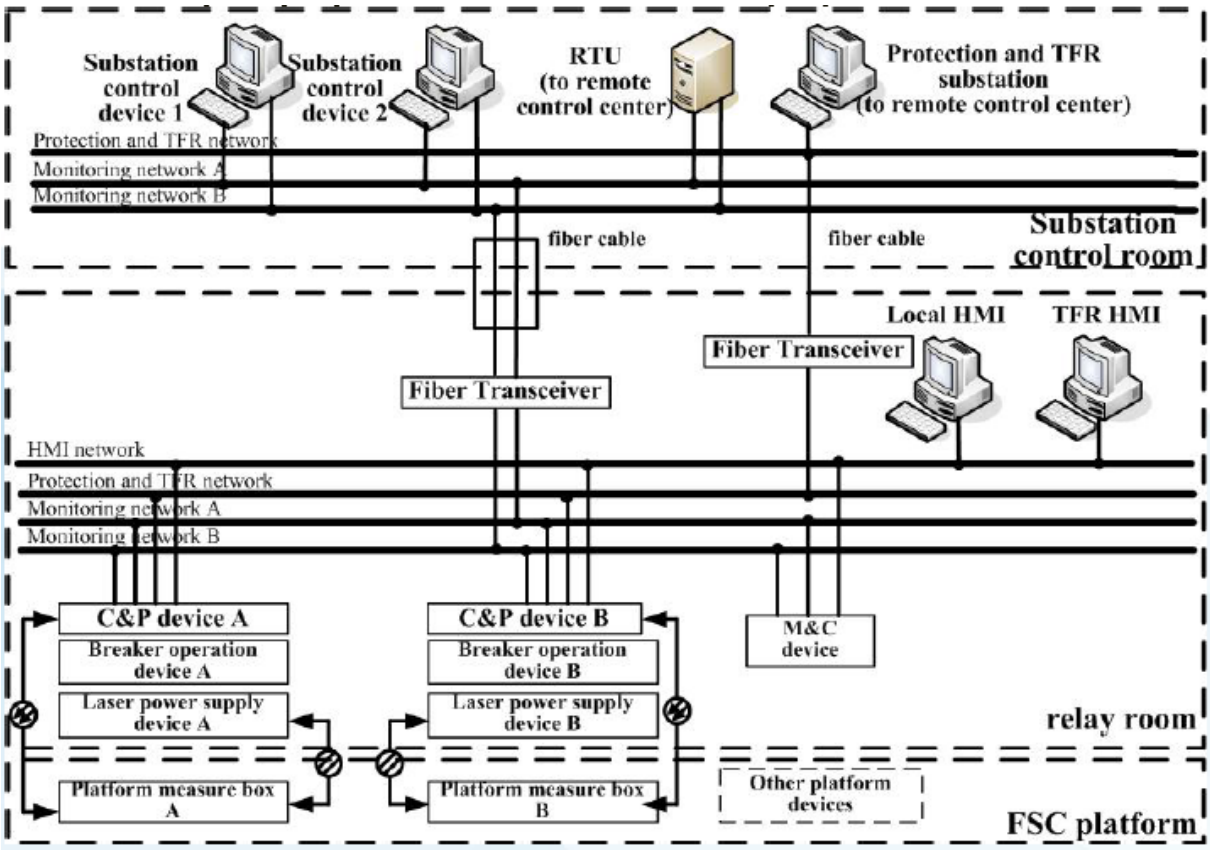

5.3.3.6- Civil Structure - Foundation Layout:

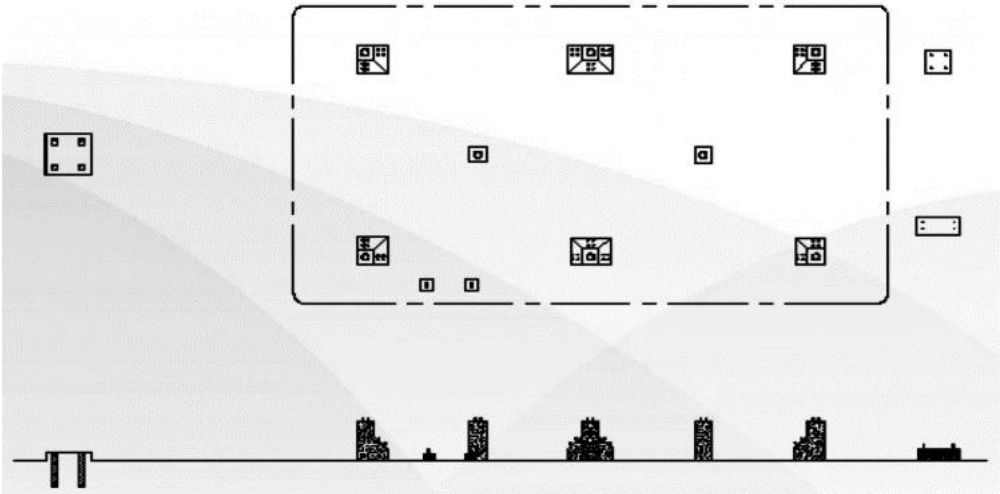

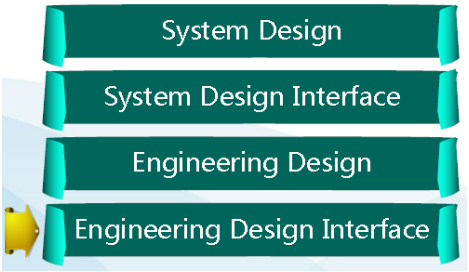

5.4- Engineering Design Interface

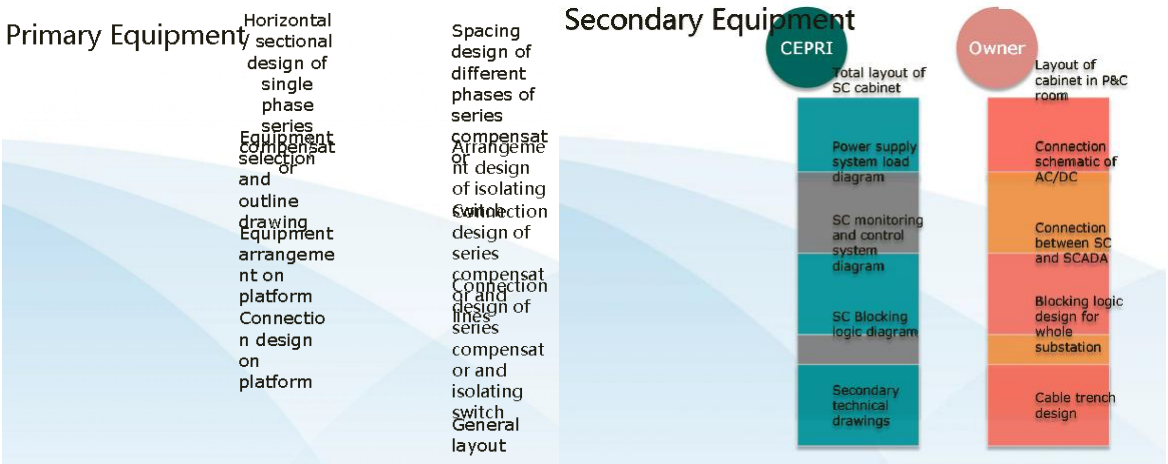

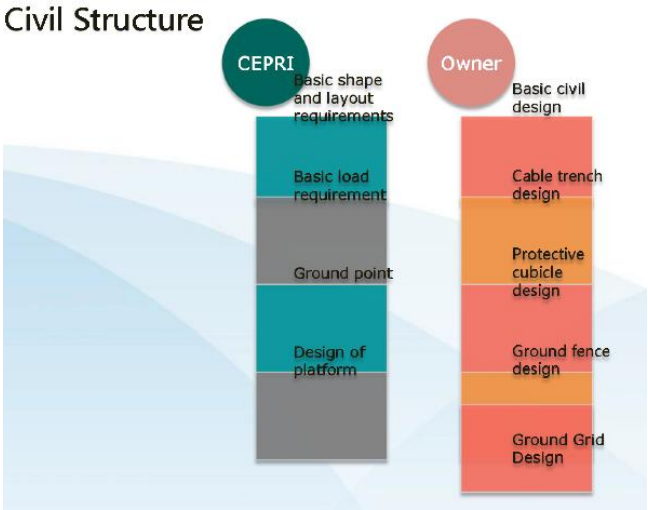

6- Training Series of FSC Engineering-3

FSC HV Equitments

6.1- Topology Diagram:

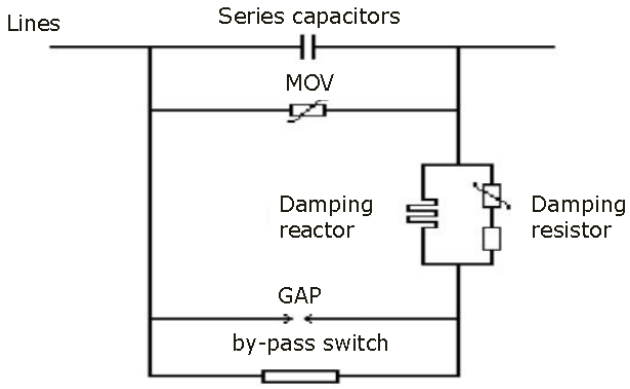

6.2- Series Capacitors:

Function: They are used to compensate the impedance of the normal operation lines,and are the **main equipment of FSC.**

Some capacitors are connected in series or in parallel:

- **Increase the number of series** → Increase the rating voltage of FSC
- **Increase the number of parallel** → Increase the rating current of FSC

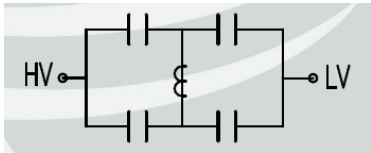

6.2.1- Fuse type of Series capacitors:

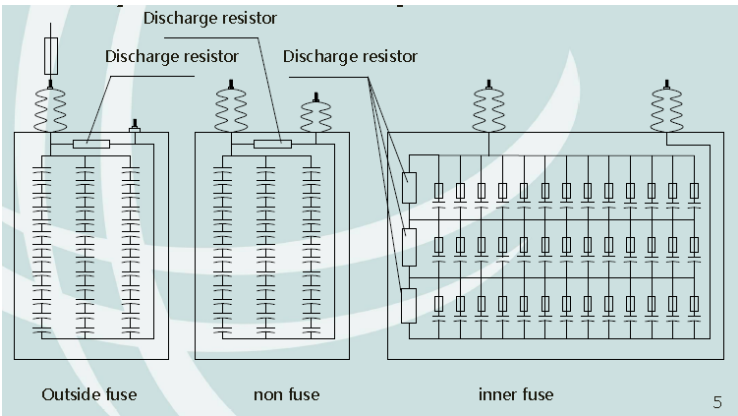

6.2.2.1- Series capacitors—inner fuse:

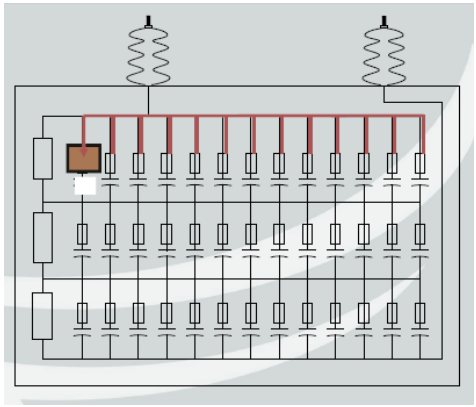

6.2.2.2- Series capacitors—non-fuse:

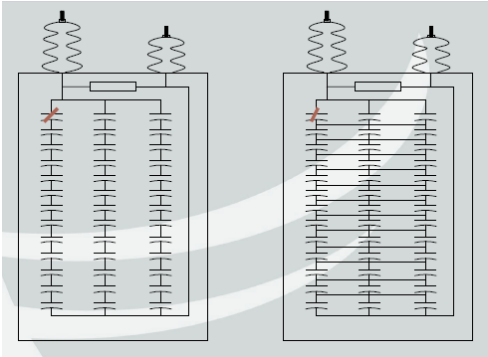

6.2.2.3- Series capacitors—outside fuse:

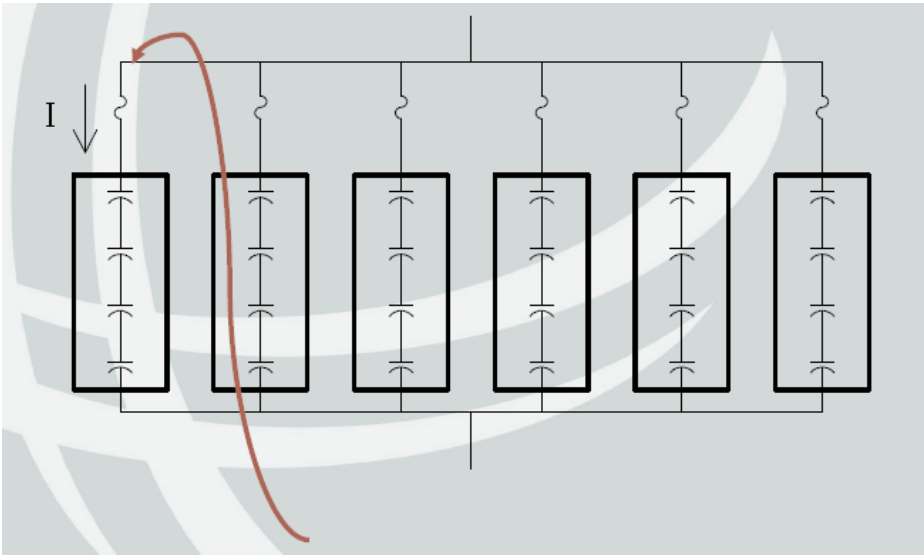

6.2.2- Connect types of Series capacitor banks:

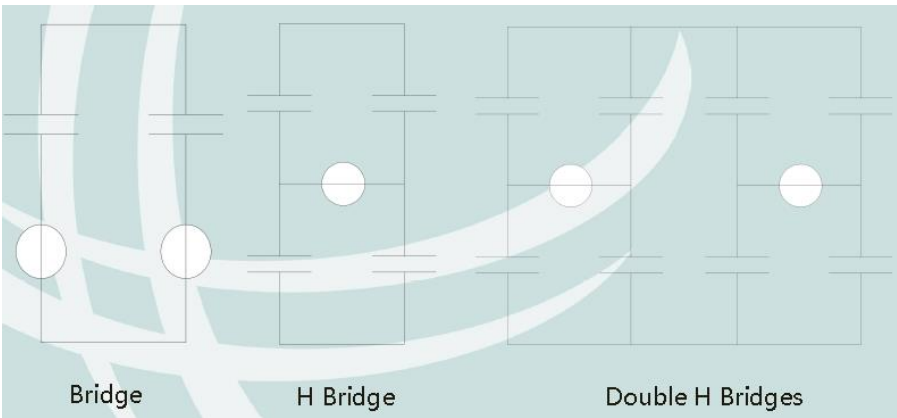

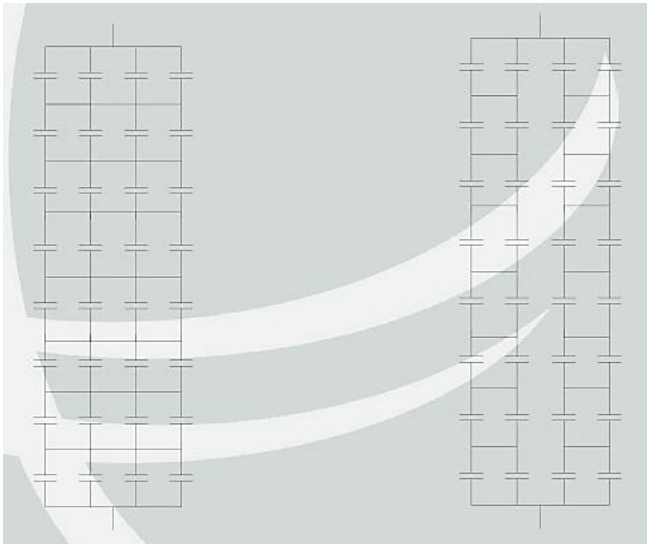

6.2.3- New Technology:

The method of double H Bridges can deduce the number of the capacitor bank, and which resolve the difficult problem between imbalance protect response and fault Energy tolarance reliable with the new capacitor units' connect method, and resolve the difficult problem of capacitors explode.

6.2.4- Produce of Capacitors:

6.2.5- Over voltage protection of Series capacitors:

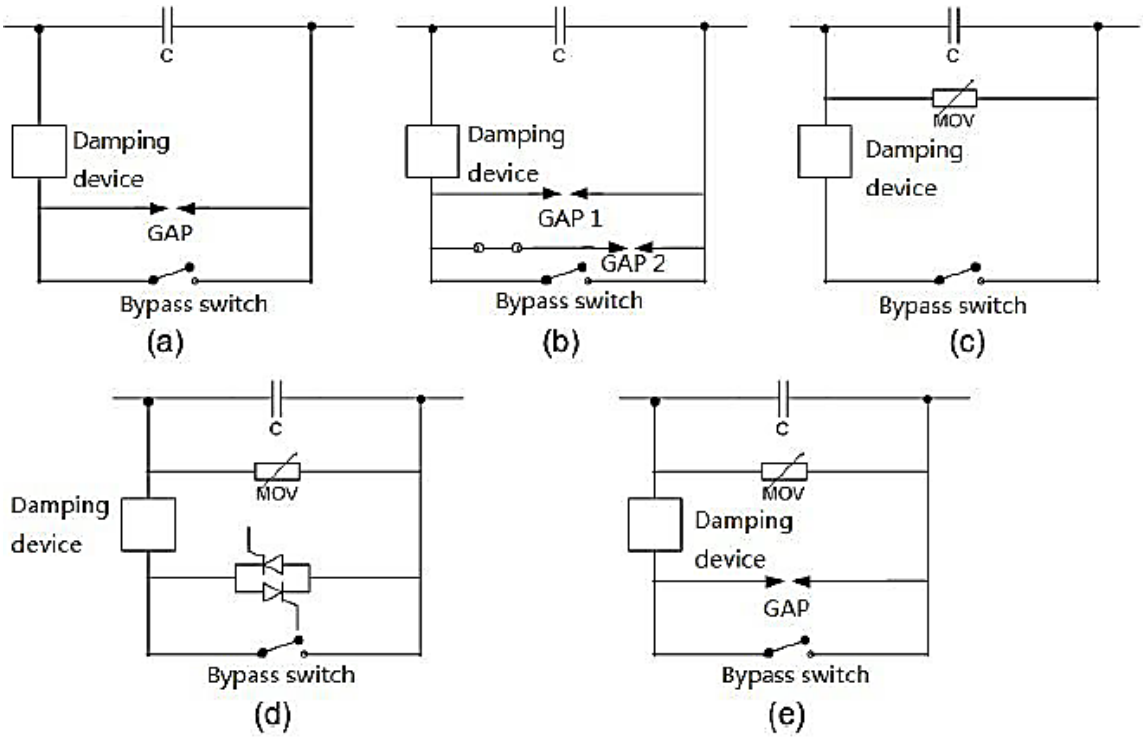

6.3- MOV

6.3.1- MOV Function:

They are connected with series capacitors in parallel, and can limit the frequency over voltage of series capacitor **below the design level by non-line voltage-current characteristic.**

6.3.2- The Main Technical Specifications of MOV:

- Voltage current characteristic
- Insulation level
- Coordination current level
- Rated heat capacity

6.4- Spark GAP:

6.4.1- Spark GAP Functions:

- The main protect equipment of MOV
- The secondary protect equipment of capacitor bank
- Trigger quickly
- Trigger by control
- Endure fault current and capacitor current
- Deduce the TRV require of line bypass

6.4.2- The Main Technical Specifications of Spark GAP:

- The minimum voltage between the both ends of the main GAP under forced-triggering
- The minimum voltage between the both ends of the main GAP under self-triggering
- Insulation level
- The ability to endurance the current and bleeding time
- The number of enduring the max fault current before maintaining
- Deionization time

6.4.3- Spark GAP fundamental diagram:

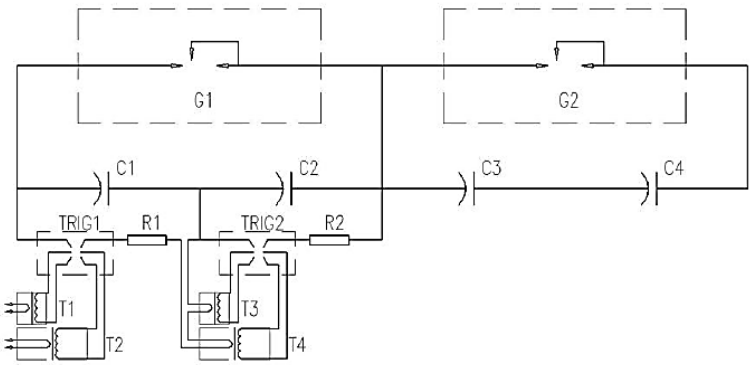

6.4.4- Spark GAP Operating Mode:

Self-triggering: Spark GAP had not received any trigger signal, if the voltage between the two electrodes reaches self-triggering condition, it will naturally flashover, the arc between the electrode arc burning.

Control-triggering: After receiving the trigger command ,the voltage between the two electrodes is between the lowest trigger voltage and the self-triggering voltage, Spark GAP is forced to trigger.

"Control-triggering is the main operating mode, Spark GAP can not put out the burning arc by itself, and it puts out the burning arc after bypass switch closing to transfer current."

6.5- By-pass Switch (Circuit Breaker):

6.6- Damping Device (Damping Reactor+ Damping Resistor):

6.6.1- Damping Device Function:

It can limit the **discharge current amplitude** and **frequency** of the capacitor banks, and provide appropriate damping during discharge process.

6.6.2- Damping Device Types:

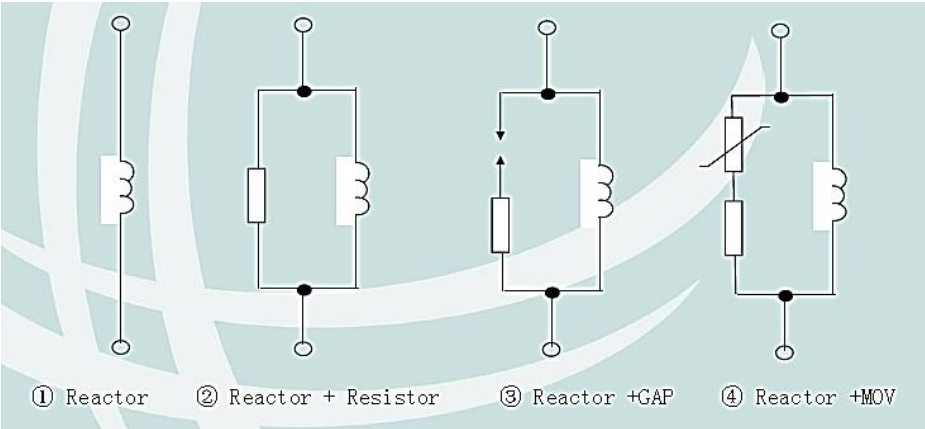

6.6.3- The Main Technical Specifications of Damping Device:

- Reactance value
- Resistor power consumption
- MOV rated voltage and energy
- Insulation level
- Discharge peak current / kApeak
- 1s Fault current flow capability / kArms
- Carrying capacity of fault current and capacitor discharge current/kApeak

6.7- Platform Support System

6.7.1- Support System Functions:

- Being the carrier of main equipment installation and operation
- Providing operation reference potential
- Reducing insulation requirements
- Providing protection for the safe operation

6.7.2- Support System Operating Environment:

- The high voltage: Operating voltage is equal to transmission line voltage
- Strong electromagnetic environment
- Outdoor climate environment
- Large load

7- Training Series of FSC Engineering-4

FSC Control and Protection System

7-1 Abbreviations:

AC:	Alternating Current	**HMI:**	Human-Machine Interface
AI:	Analog input	**IO:**	Input and Output
BS:	Bypass Switch	**LAN:**	Local Area Network
CAN:	Controller Area Network	**LCD:**	Liquit Cristal Display
C&P:	Control and Protection	**M&C:**	Measure and Control
CT:	Current Transformer	**RTU:**	Remote Terminal Unit
DC:	Direct Current	**SAS:**	Substation Automation System
DI:	Digital Input	**SC:**	Series Compensation
DO:	Digital Output	**SOE:**	Sequence Of Events
DP:	Data Process	**SSR:**	Sub-Synchronous Resonance
EMC:	Electromagnetic compatibility	**TFR:**	Transient Fault Recorder
FSC:	Fixed Series Compensation		

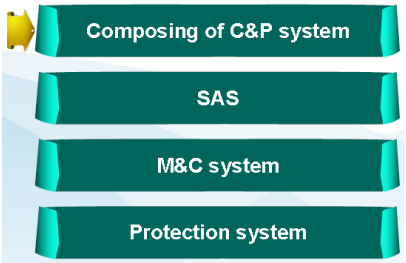

7.2- Composing of C&P System:

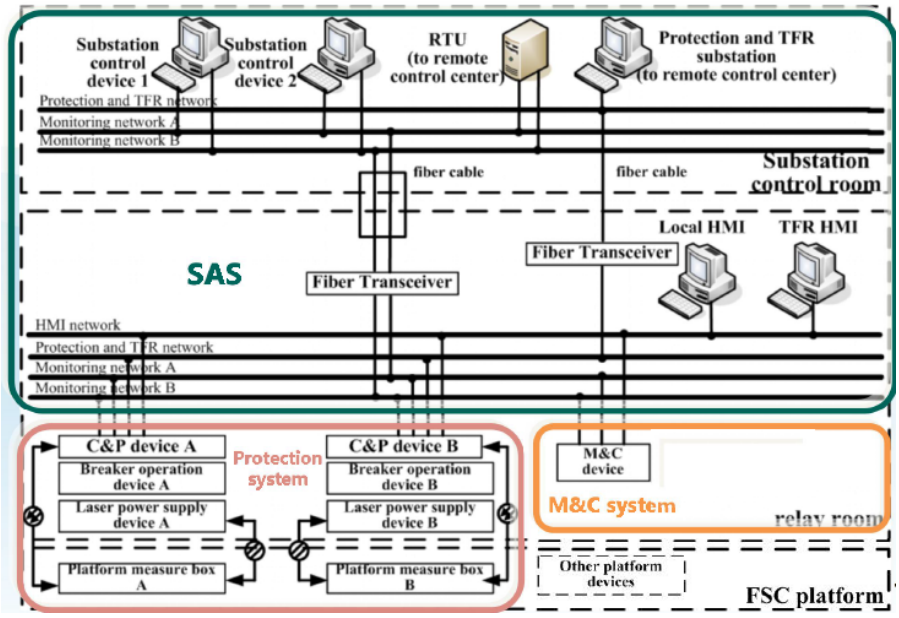

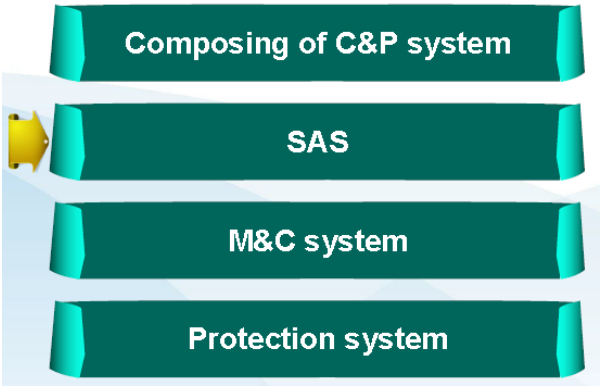

7.3- Substation Automation System (SAS):

7.3.1- Composing of System:

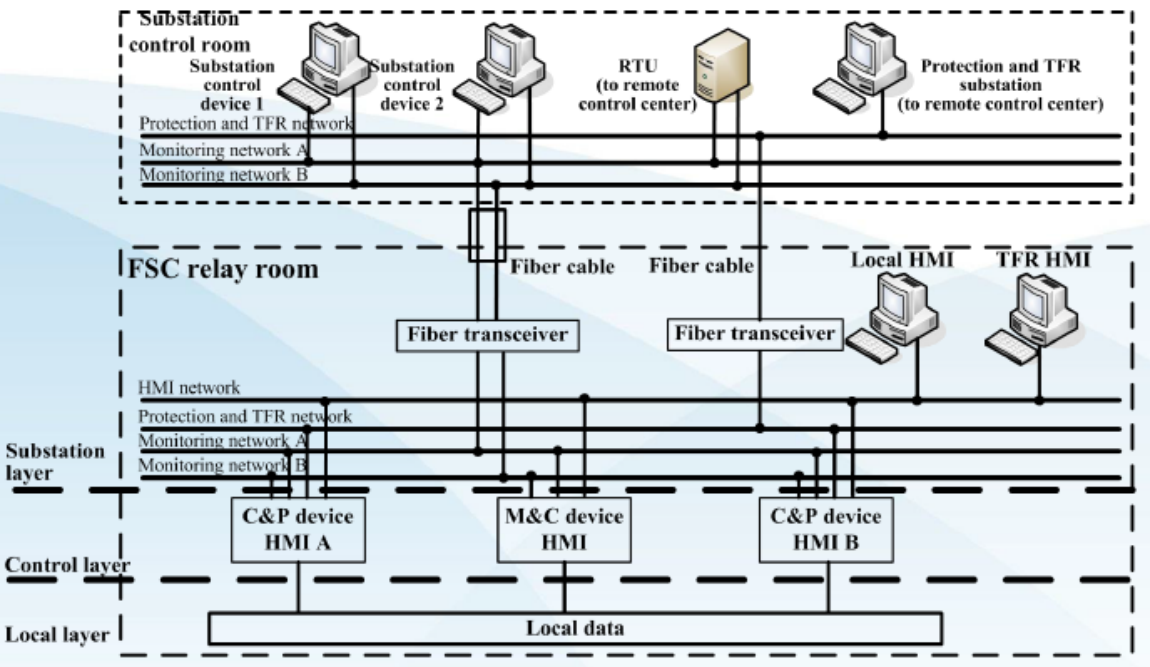

7.3.2- Main Functions: displaying the state of breakers and switches

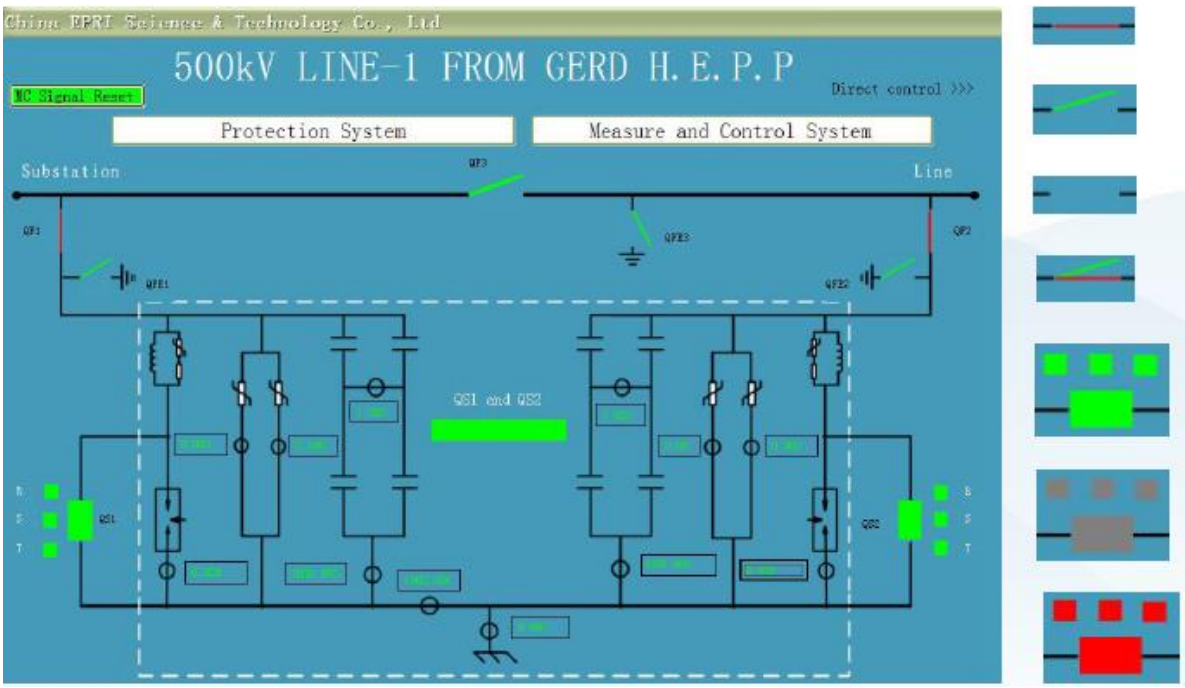

7.3.3- Main Functions: displaying electrical values

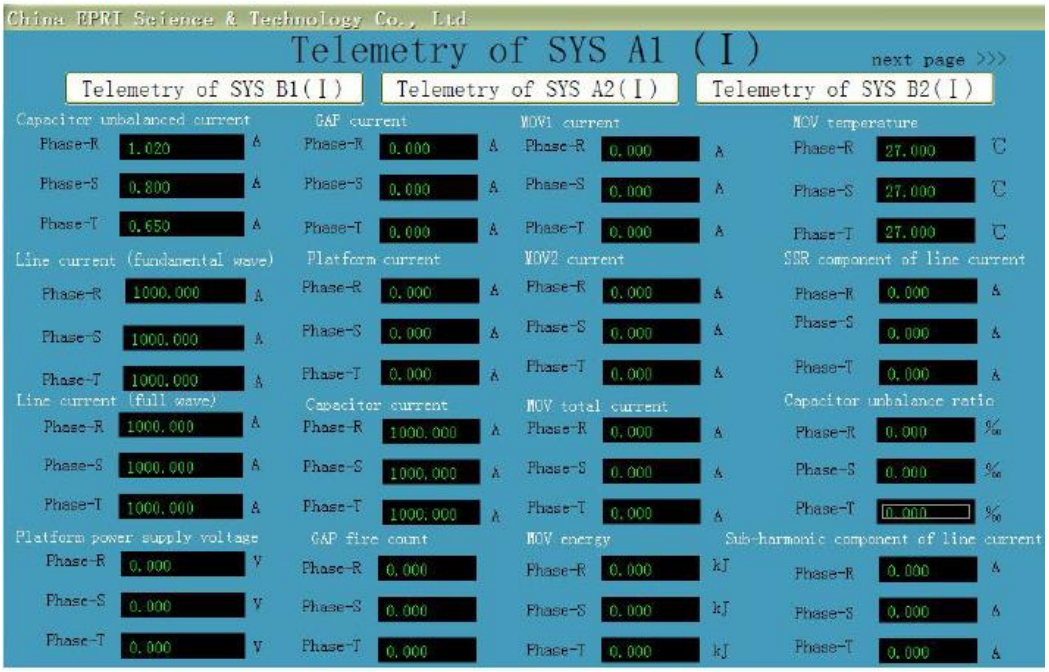

7.3.4- Main Functions: Telecommand

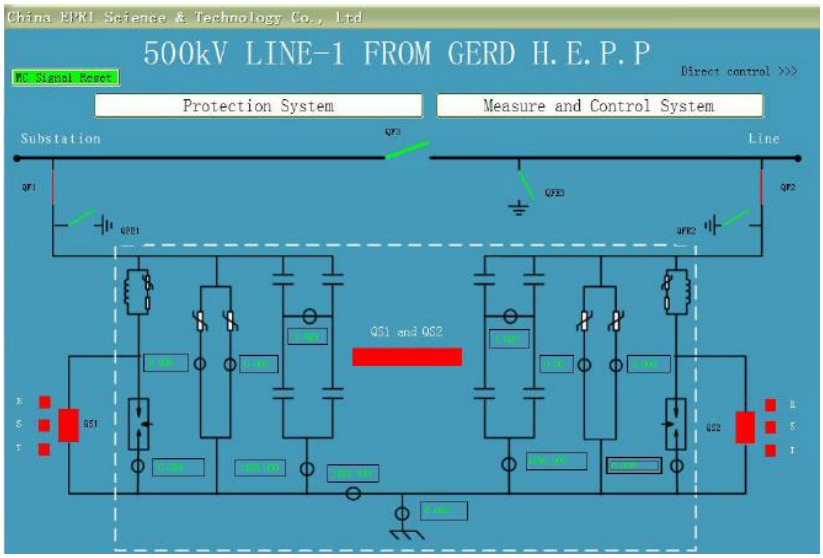

7.3.5- Main Functions: telecommand (continue) - inserting FSC

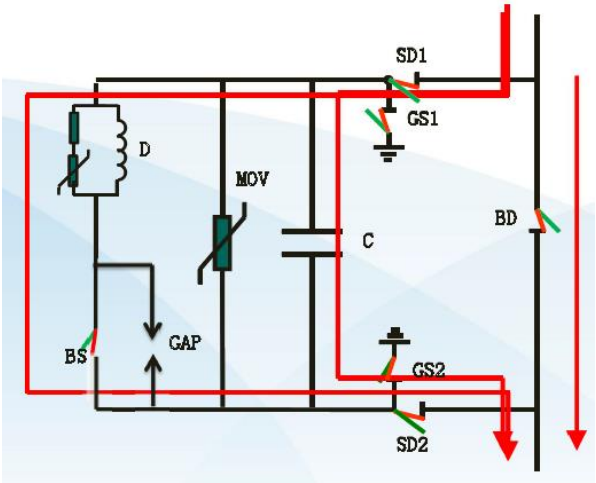

7.3.6- Main Functions: telecommand (continue) - bypassing FSC

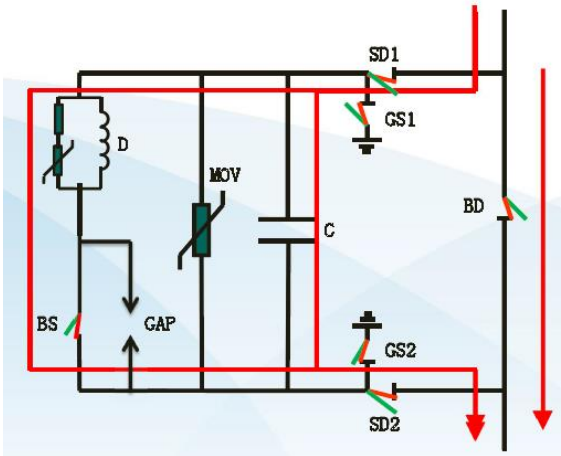

7.3.7- Main Functions: Abnormal Events Alarm

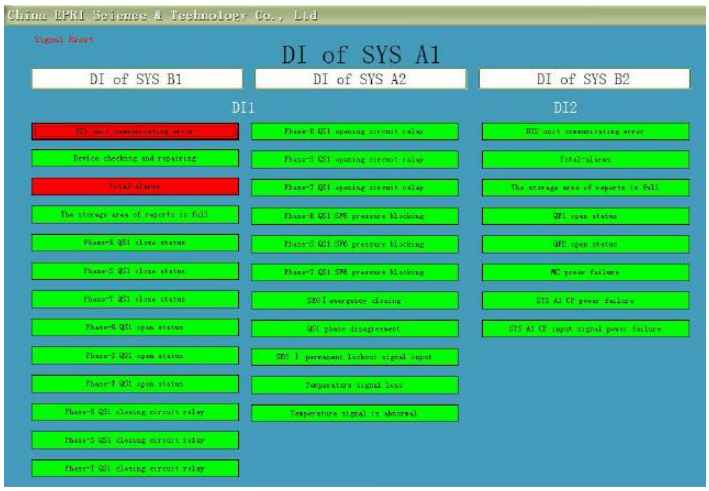

7.3.8- Main Functions: recording SOE

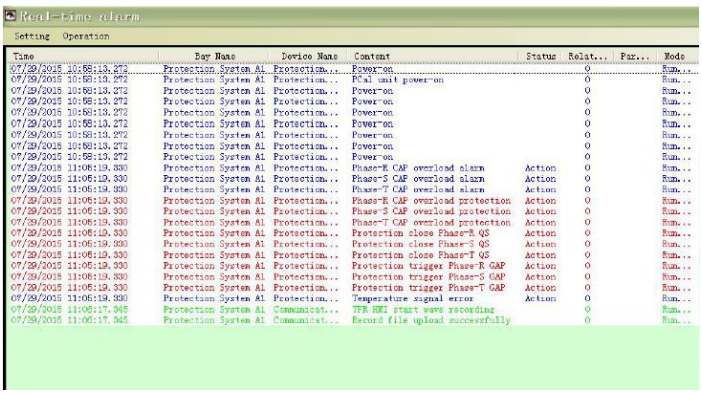

7.3.9- Main Functions: Control level management

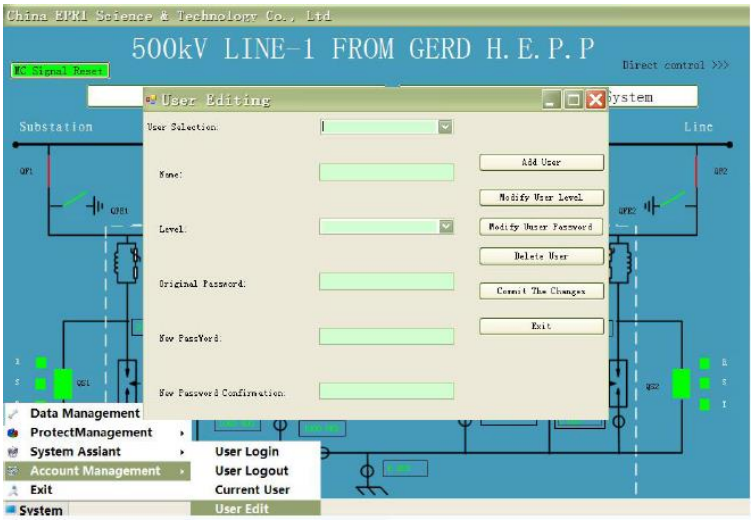

7.3.10- Main Functions: Other functions

- Printing reports and protection settings.
- Preventing misoperation on breakers and switches.
- Inquiring and modifying protection settings locally or remotely.

7.3.11- Interfaces description:

- **Interfaces with SAS:** support standard protocols IEC 60870-5-101, IEC 60870-5-103, IEC 60870-5-104 and etc.
- **Interfaces with RTU:** support standard protocols IEC-60870-5-101, IEC-60870-5-104 and etc.
- **Interfaces with protection or TFR substation:** support standard protocols IEC 60870-5-103 and etc.
- **Interfaces with automatic devices:** receive and response to state information and abnormal event alarm from automatic devices in substation.

7.3.12- Technical Indicators: Error

Contents	Indicators
Time reference	<±1ms
SEO resolution	<1ms
Telemetering compositive error	<0.2%
Telemetering pass rate	>99%
Teleindication correct rate	>99.99%
Telecommand correct rate	100%
Ethernet bit error rate	<10×10^－5

7.3.13- Technical Indicators: Reliability

Contents	Indicators
MTFB	>25000 hours
MTTR	<1 hour
System availability rate	>99.5%

7.3.14- Technical Indicators: Safety

Contents	Indicators
CPU load in normal state	<20%
CPU load during 10s in fault state	<40%

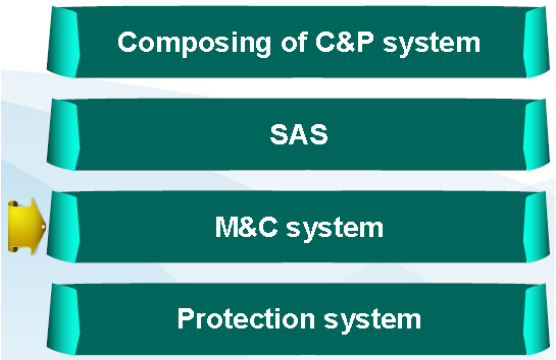

7.4- Measure & Control System (M&C):

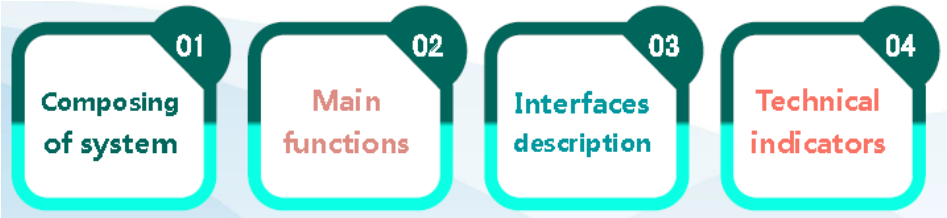

7.4.1- Composing of System:

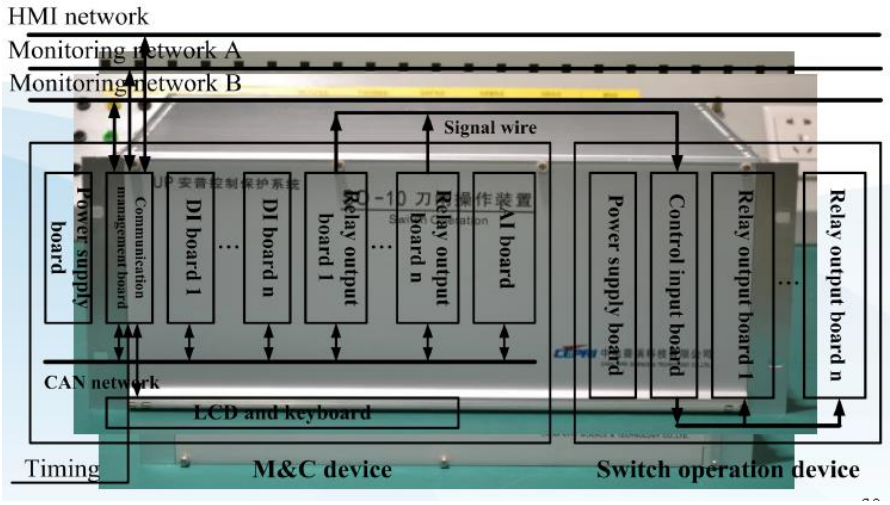

7.4.2- Main Functions:

- Receives and executes control command from local HMI, SAS or remote control center, to open/close breakers and switches.
- Collects working state of SC equipment, and sends it to SAS.
- Samples AC/DC analog signals, and calculates current or voltage RMS, power system frequency, real power, reactive power, power factor, and etc.
- Self-checks and self-diagnoses, and sends alarm when important components and circuits fail.

7.4.3- Interfaces discriptions:

- **DI interfaces:** 68 inputs , at most 170 inputs.
- **Relay output interfaces:** 28 outputs (relay contacts), at most 70 outputs.
- **AI interfaces:** 8×CTs+8×PTs+6×DC inputs , at most 16×CTs+16×PTs+12×DC inputs.
- **Communication interfaces:** 4 Ethernets (LAN), 5 RS485 and 1 RS232 (used for debugging).
- **Timing interfaces:** IRIG_B (DC) + PPS.

7.4.4- Technical Indicators: Nominal Values

Contents	Indicators
Voltage	**100／√3V, 100V**
Current	**5A, 1A**
Frequency	**50Hz, 60Hz**

7.4.5- Technical Indicators: Measure Accuracy

Contents	Indicators
Current, Voltage	±%0.2
Active power, Reactive power, PF	±%0.5
Frequency	±0.02Hz

7.4.6- Technical Indicators: influence quantity

Contents	Indicators
Allowed variation due to frequency deviation (45~55Hz , 54~66Hz)	**Current , voltage ±0.2% . Power ±0.5%**
Allowed variation due to temperature change (-10℃~55℃)	**Current , voltage ±0.2% . Power ±0.5%**
Allowed variation due to harmonic content of measured signal (20%)	**Current , voltage ±0.2% . Power ±0.5%**
Allowed variation due to measured signal exceeding span (120%)	**Current , voltage ±0.1% . Power ±0.25%**
Allowed variation due to selfheating (30min)	**Current , voltage ±0.2% . Power ±0.5%**
Allowed variation due to line unbalance	**Power ±0.5%**
Allowed variation due to the measured line interacting	**Power ±0.1%**
Allowed variation due to power factor change	**Power ±0.2%**

7.4.7- Technical Indicators: EMC

Contents	Indicators
Immunity to radiated electromagnetic field	3 grade
Immunity to fast transient disturbance	4 grade
Immunity to fast transient pulses	3 grade
Immunity to electrostatic discharge	4 grade
Immunity to surge	4 grade
Immunity to conducted disturbances induced by radio frequency fields	3 grade
Immunity to the power frequency magnetic field	5 grade
Immunity to pulse magnetic field	5 grade
Immunity to damped oscillatory magnetic field	5 grade

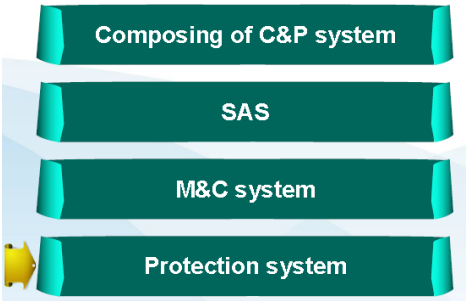

7.5- Protection System:

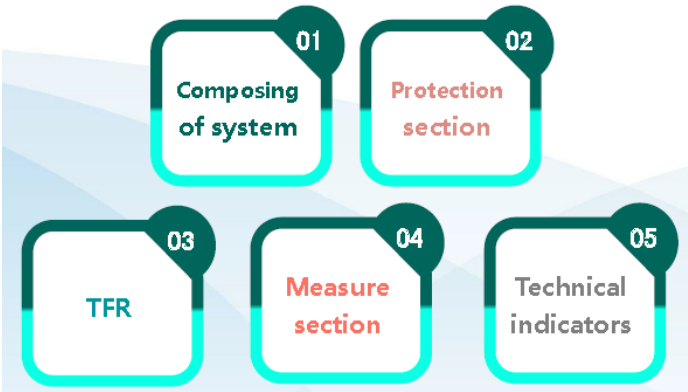

7.5.1- Composing of System:

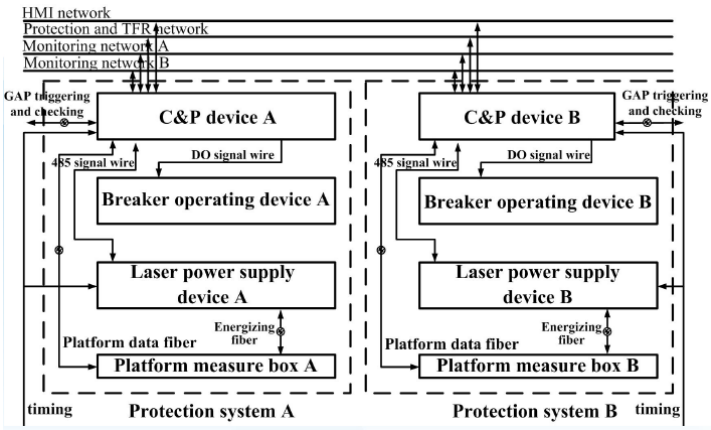

7.5.2- Protection Section: Composing

7.5.3- Protection Section: Protection Categories

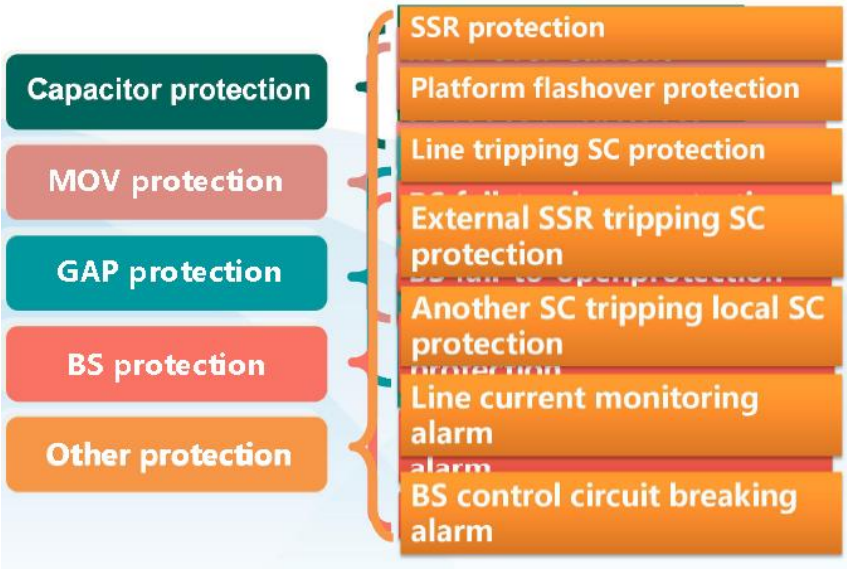

7.5.4- Protection Section: interfaces description

- **GAP control interfaces**: 3 phases, 6 optical signals.
- **DI interfaces:** 68 inputs, at most 170 inputs.
- **Relay output interfaces:** 28 outputs (relay contact), at most 70 outputs.
- **Temperature signal interfaces:** are connected with outdoor temperature sensor, and collect MOV compensating temperature signal.
- **Communication interfaces:** 4 ethernets (LAN), 5 RS485 and 1 RS232 (used for debugging).
- **Timing interfaces:** IRIG_B (DC) + PPS.

7.5.5- Transient Fault Recorder (TFR): Composing

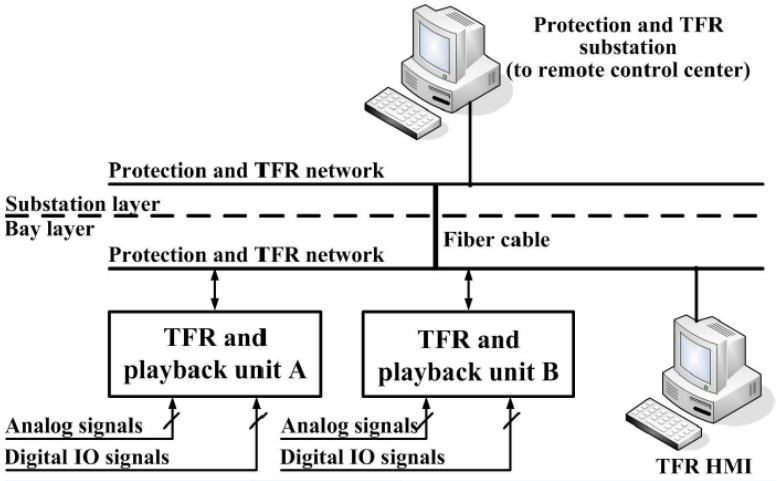

7.5.6- Transient Fault Recorder (TFR): Technical feathers

- **Sampling frequency:** 12.8 kHz, 256 sampling points per cycle.
- **Pre-recording time:** 500ms, 25 cycles.
- **The recording time:** 200~300 cycles, is automatically adjusted according to the Project demand.
- Automatically or Manually start TFR.
- Playback using the historical TFR file or selfedited waveform file.

7.5.7- Transient Fault Recorder (TFR): Analog TFR signals

1	3 phases line current
2	3 phases capacitor current
3	3 phases capacitor unbalance current
4	3 phases MOV1 current
5	3 phases MOV2 current
6	3 phases GAP current
7	3 phases platform current
8	3 phases platform power supply voltage

7.5.8- Transient Fault Recorder (TFR): Digital IO TFR Signals

1	3 phases BS status
2	3 phases GAP triggering command
3	3 phases Line tripping SC protection
4	ABC phases Line tripping SC protection
5	3 phases MOV over-current protection
6	3 phases MOV energy low-setting protection
7	3 phases MOV energy high-setting protection
8	3 phases MOV temperature protection
9	3 phases MOV unbalance protection

10	3 phases GAP self-triggering protection
11	3 phases GAP delay triggering protection
12	3 phases GAP refused triggering protection
13	3 phases line current monitoring alarm
14	3 phases capacitor overload alarm
15	3 phases capacitor overload protection
16	3 phases capacitor unbalance alarm
17	3 phases capacitor unbalance low-setting protection start-up
18	3 phases capacitor unbalance low-setting protection bypass
19	3 phases capacitor unbalance high-setting protection
20	3 phases platform flashover protection
21	3 phases BS fail-to-close protection
22	3 phases BS fail-to-close alarm
23	3 phases BS fail-to-open protection
24	3 phases SSR alarm
25	3 phases SSR protection
26	Local FSC tripping another FSC
27	3 phases BS SF6 pressure blocking alarm
28	3 phases BS control circuit breaking alarm
29	BS phase disagreement protection
30	BS phase disagreement self-protection
31	Another FSC tripping local FSC protection
32	BS emergency closing
33	External SSR tripping FSC protection
34	FSC protection tripping line

7.5.9- Measure Section: Composing

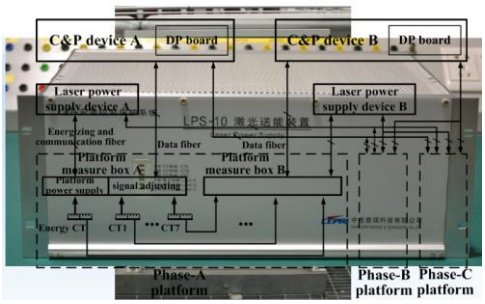

7.5.10- Measure Section: Platform data sampling

- Sample 12 analog signals simultaneously.
- Double sets of data sampling components.
- Strong anti-electromagnetic interference ability.
- Sampling frequency is 12.8 kHz.
- Optical signal Transmission distance: ≥300m.
- Working temperature range: －40℃ ~＋70℃.
- Power supply voltage range: 5.6V~6.6V.

7.5.11- Measure Section: Data collection

- Receives sampled data from 3 phases platform, and sends it to protection board and communication board in a certain format.
- Checks whether the data is complete and correct.
- Monitors working state of platform data sampling device.
- Transmits working state of platform data sampling device to SAS.

7.5.12- Measure Section: Platform Power Supply

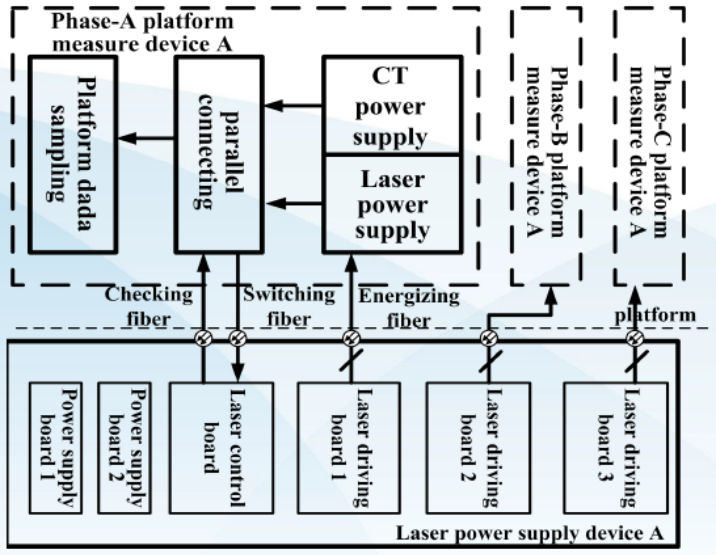

7.5.13- Measure Section: Technical Features of Platform Power Supply

- Platform power supply working temperature range of: ground segment is -10℃~＋55℃ , platform segment is -40℃~＋70℃.
- Continuously run in 95% relative humidity and 25℃ environment temperature.
- Loss of energy transmission : < 3db／km.

7.5.14- Technical indicators: EMC

Contents	Indicators
Immunity to radiated electromagnetic field	3 grade
Immunity to fast transient disturbance	4 grade
Immunity to fast transient pulses	3 grade
Immunity to electrostatic discharge	4 grade
Immunity to surge	4 grade
Immunity to conducted disturbances induced by radio frequency fields	3 grade
Immunity to the power frequency magnetic field	5 grade
Immunity to pulse magnetic field	5 grade
Immunity to damped oscillatory magnetic field	5 grade

8- Training Series of FSC Engineering-5

FSC Protection Principles

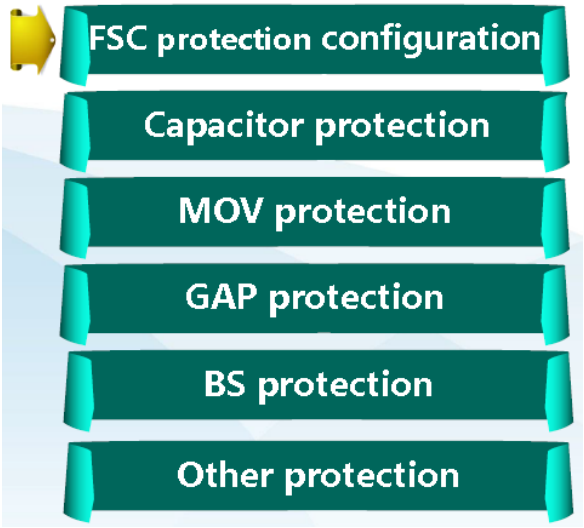

8.1- FSC Protection Configuration:

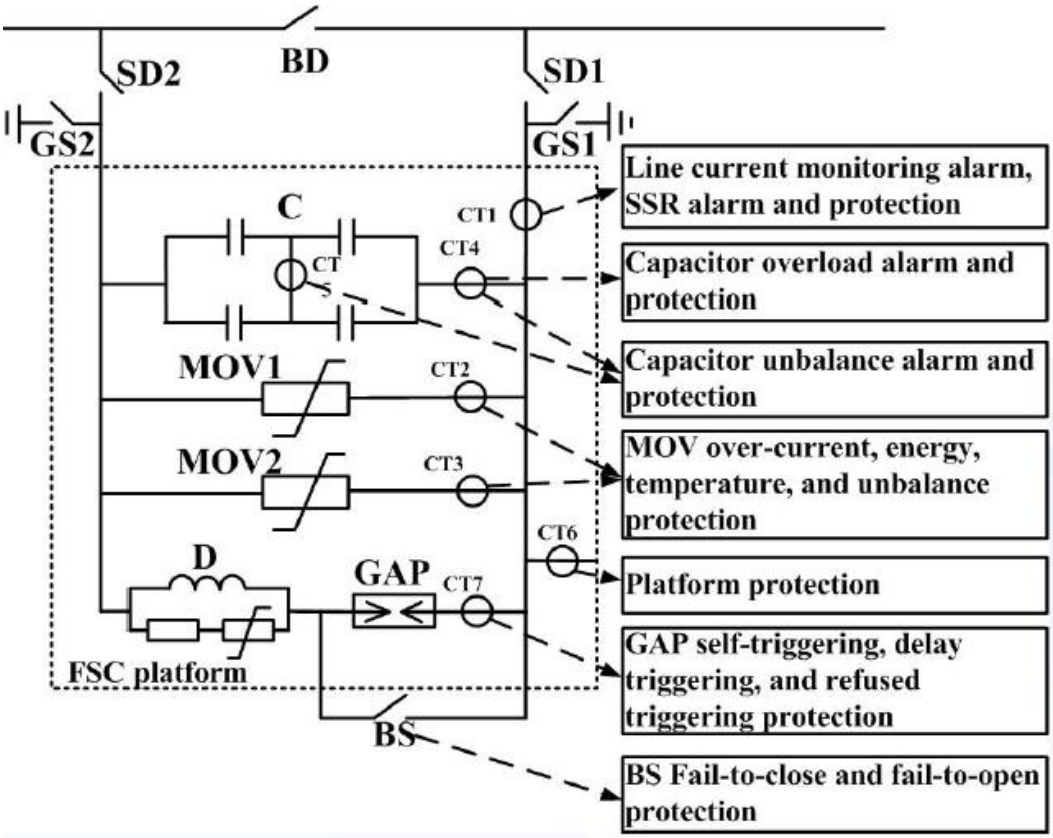

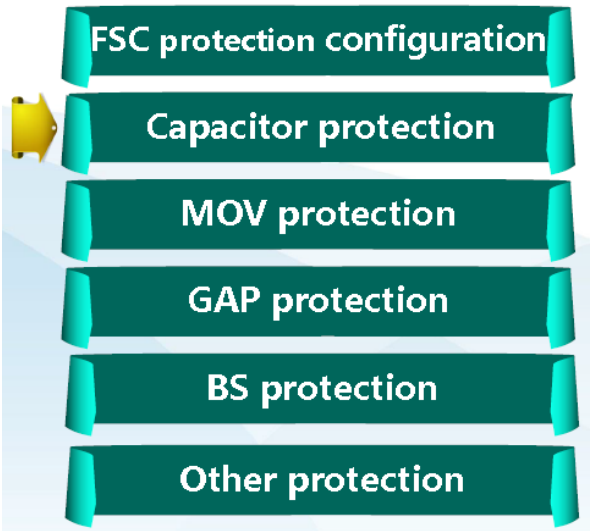

8.2- Capacitor Protection:

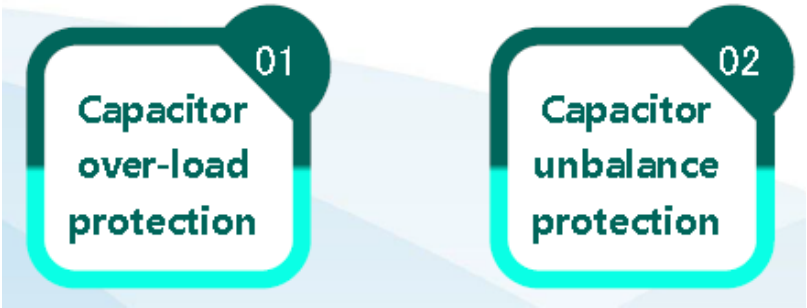

8.2.1- Reverse-time limit curve

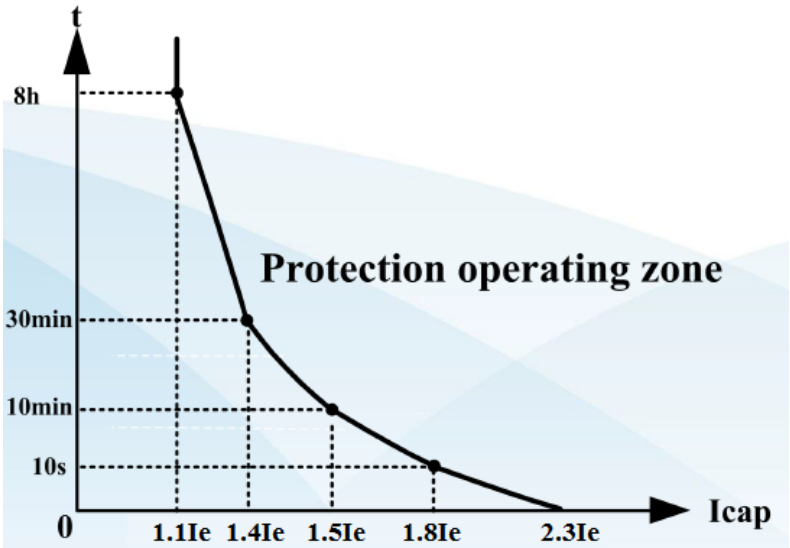

Ie: Capacitor Rated Current, **Icap:** Capacitor Current, **t:** duration of overload current

8.2.2- Capacitor overload alarm: capacitor overload caution

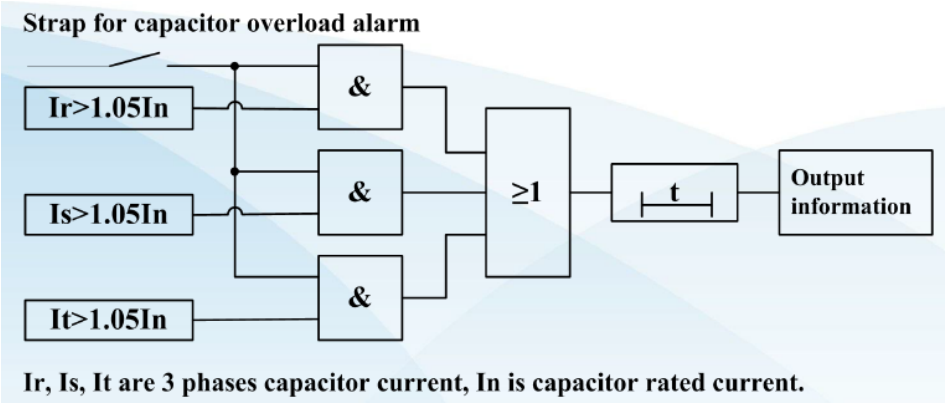

8.2.3- Capacitor overload protection: prevents capacitor overload for long time.

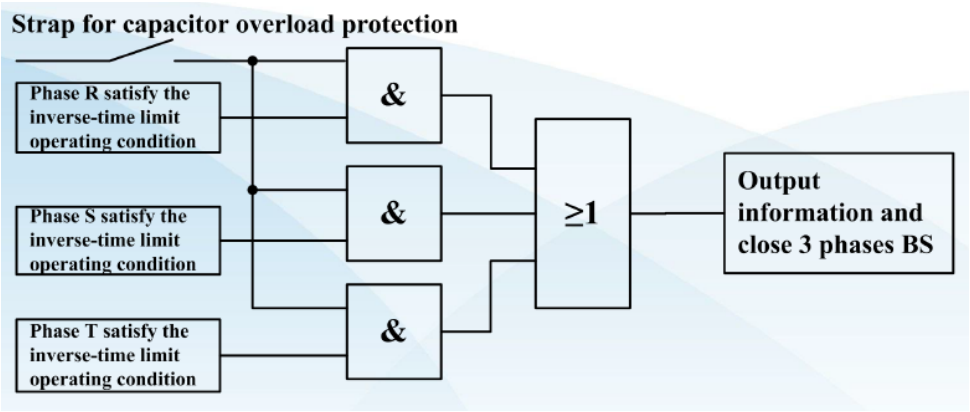

8.2.4- Capacitor unbalance alarmı: prevents capacitor unit or element damaged

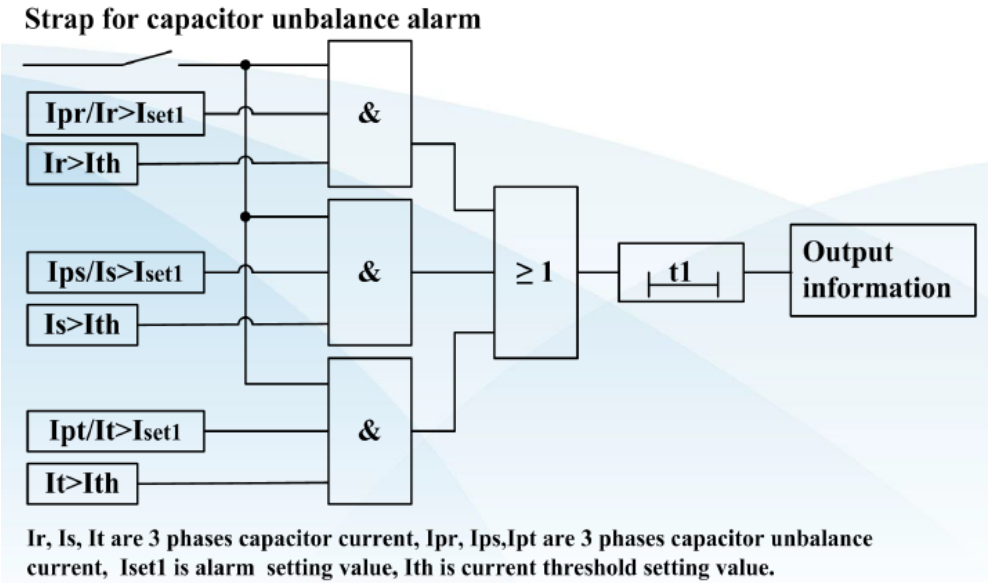

8.2.5- Capacitor Unbalance low-setting protection: prevents capacitor unit or element damaged.

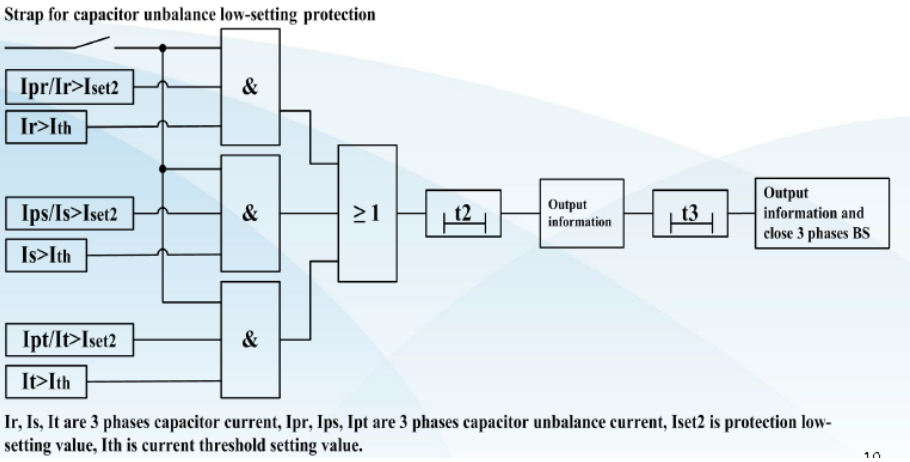

8.2.6- Capacitor Unbalance high-setting protection: prevents capacitor unit or element damaged.

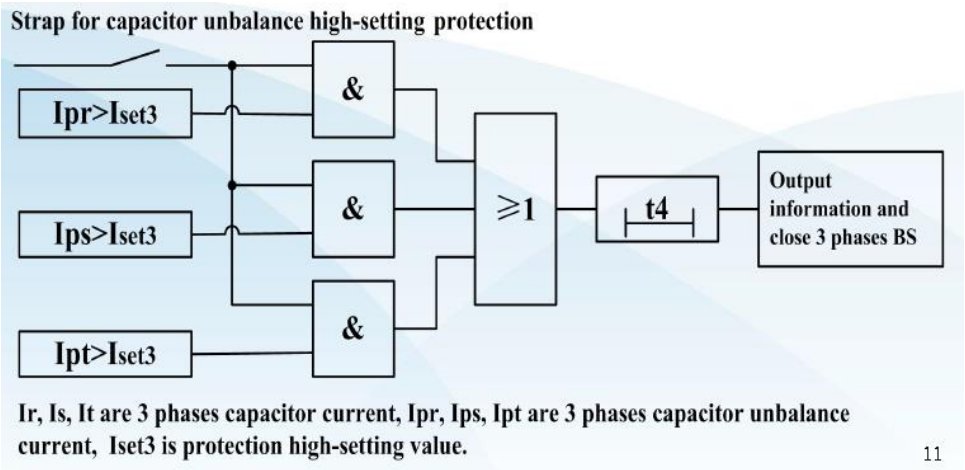

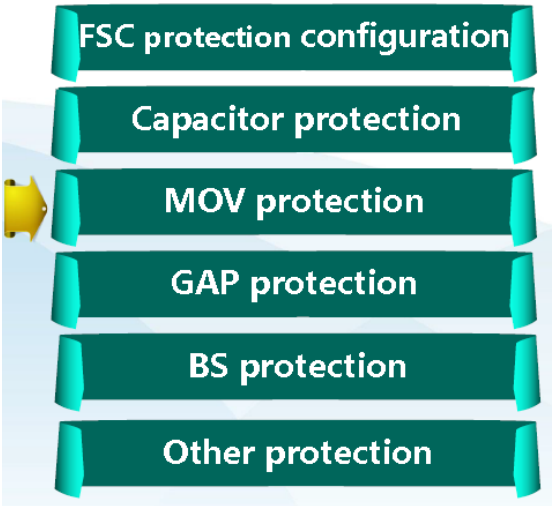

8.3- MOV Protection:

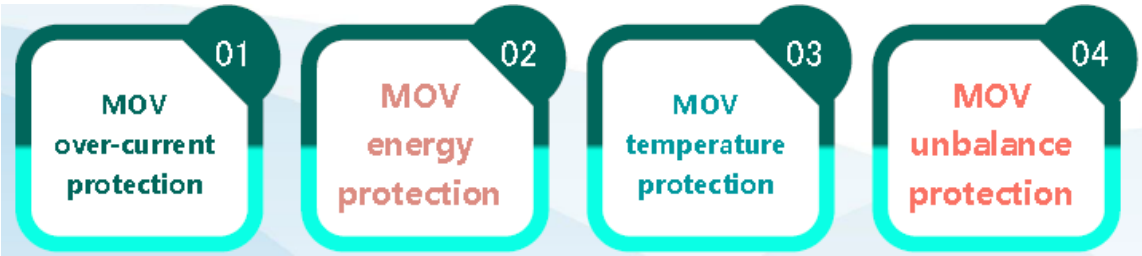

8.3.1- MOV over-current protection: aims to power line short fault occurring in location near to FSC

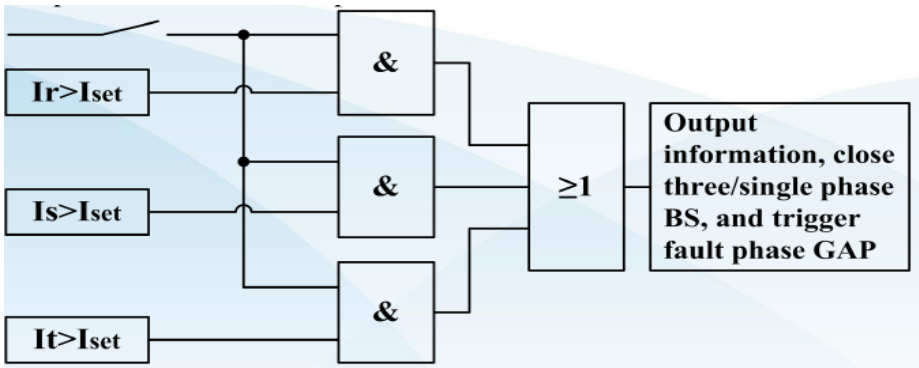

Ir, Is, It are 3 phases MOV current instantaneous value， Iset is MOV over-current protection setting value

8.3.2- MOV Energy low-setting protection: aims to power line short fault occurring in location far from FSC

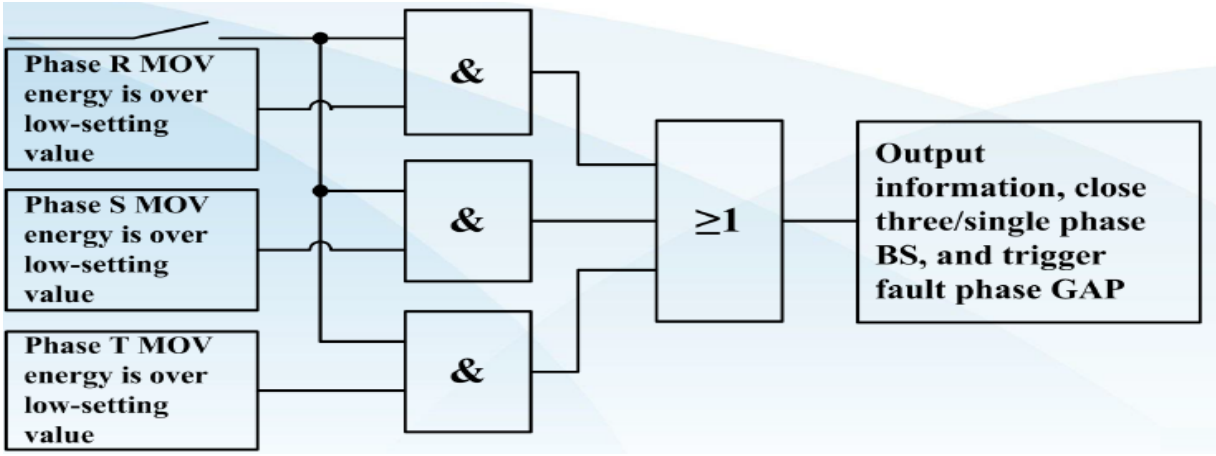

8.3.4- MOV Energy high-setting protection: aims to platform device abnormal.

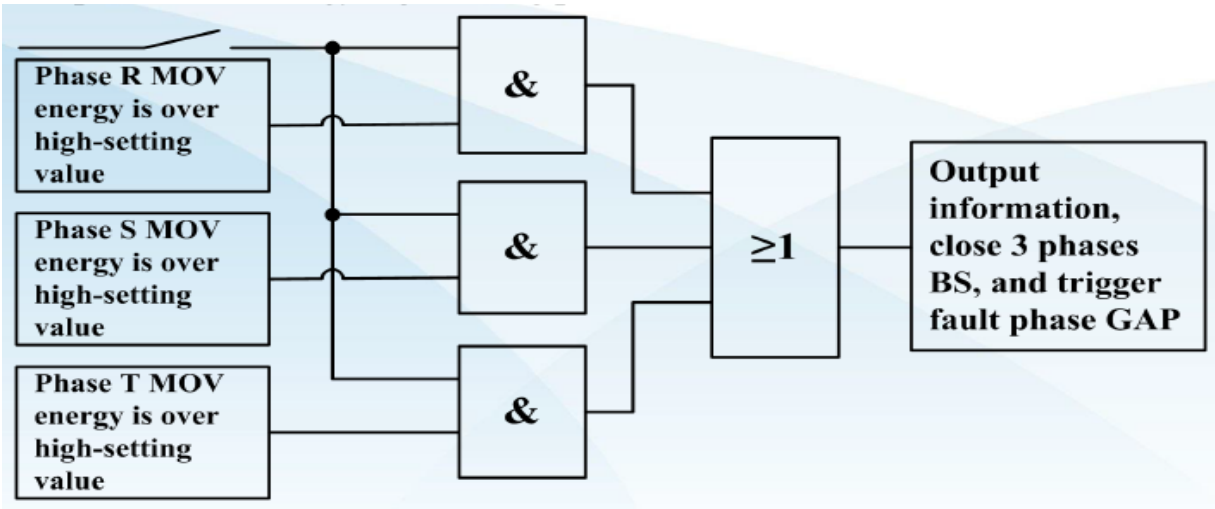

8.3.5- MOV Temparature protection: prevents MOV temperature exceeding setting value.

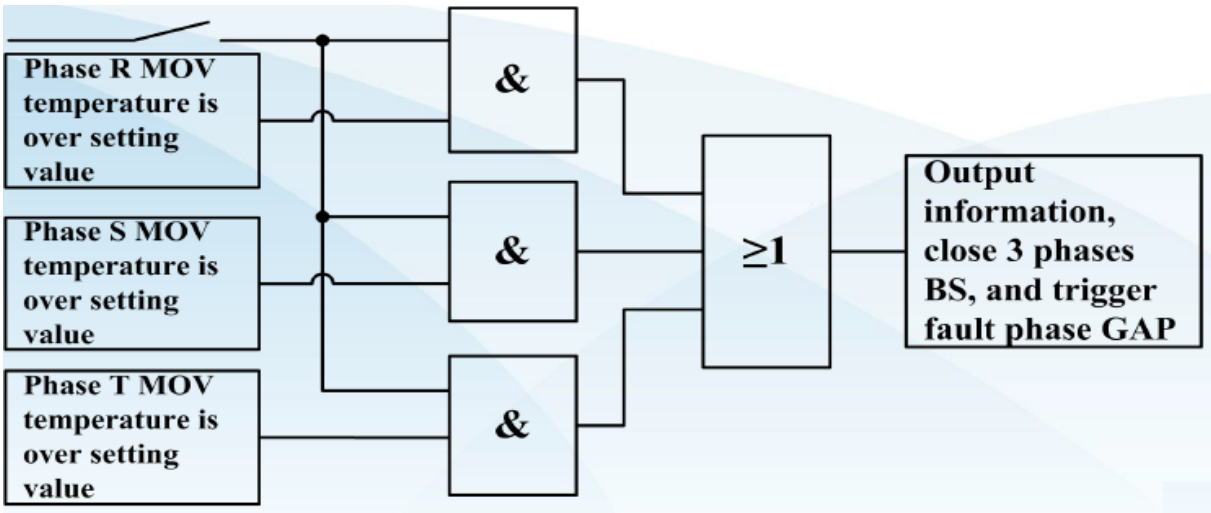

8.3.6- MOV Unbalance protection: aims to MOV unit damage.

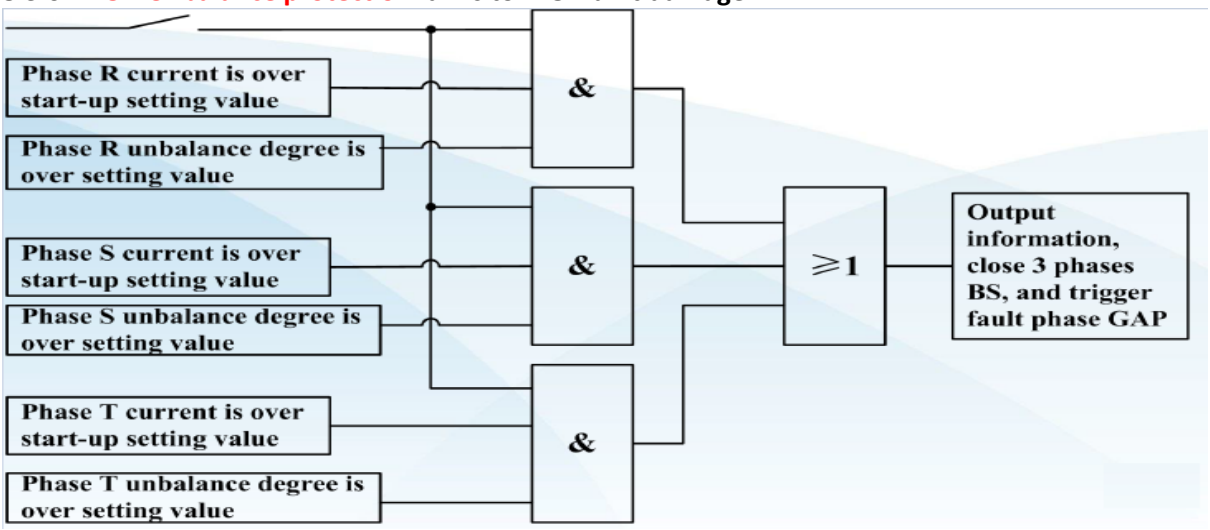

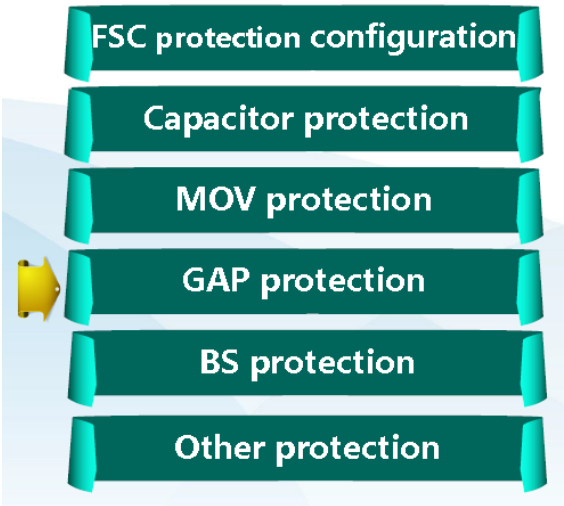

8.4- Spark GAP Protection:

8.4.1- GAP Self-triggering protection: aims to GAP or triggering device abnormal.

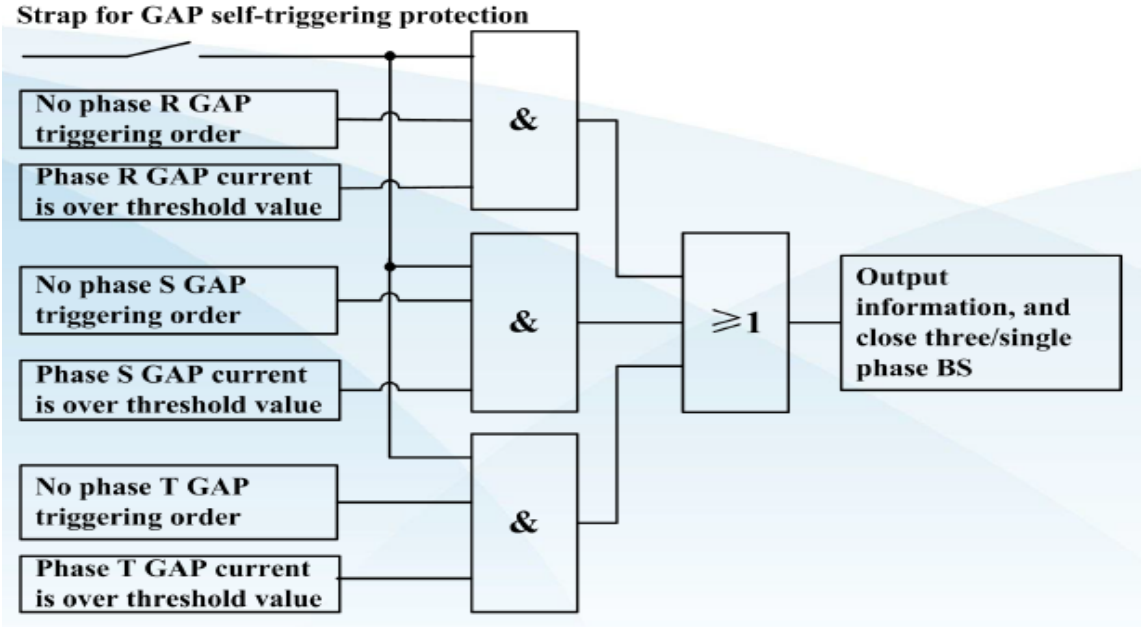

8.4.2- GAP Refused triggering protection: aims to GAP or triggering device abnormal.

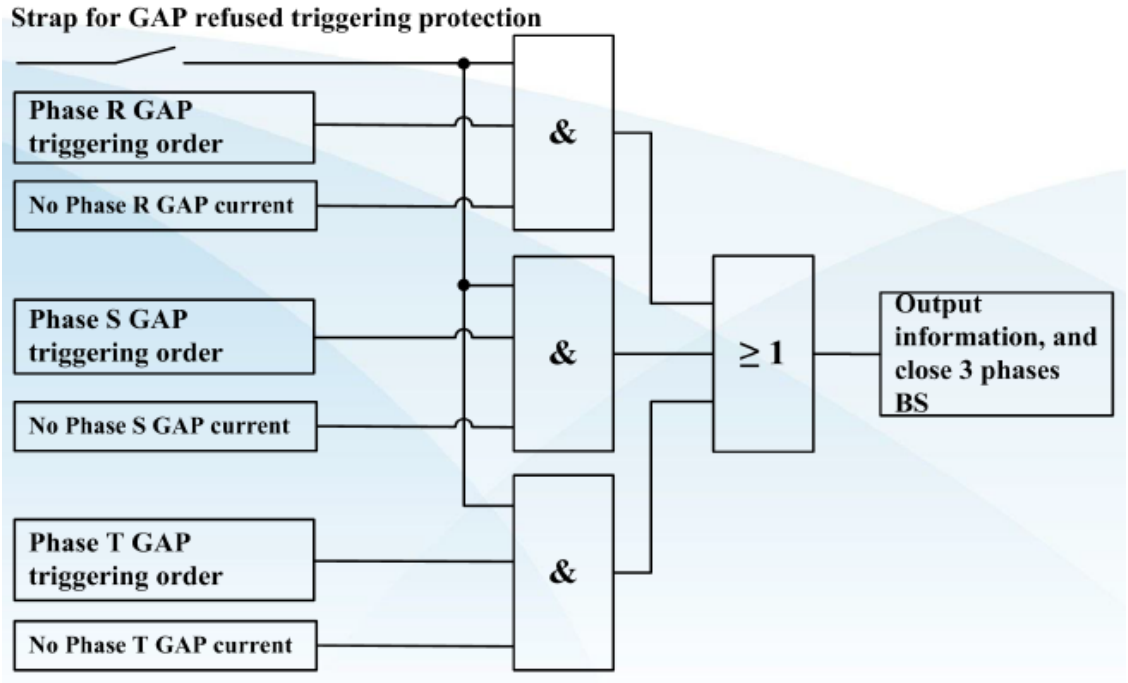

8.4.3- GAP delay triggering protection: aims to GAP or triggering device abnormal.

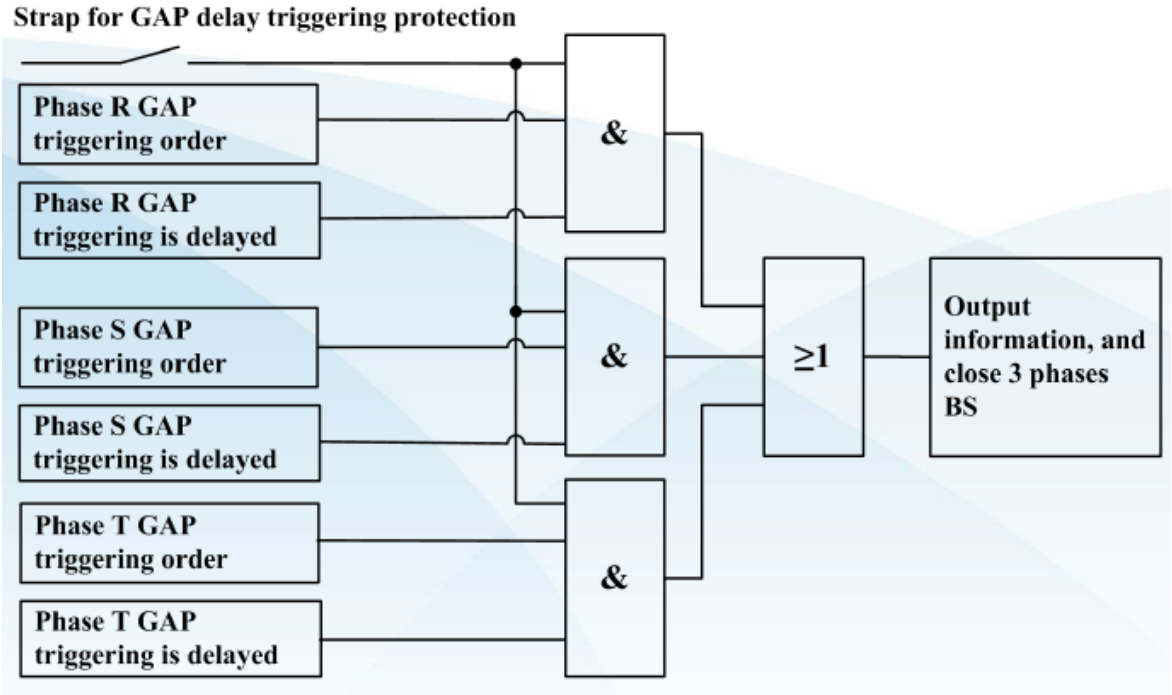

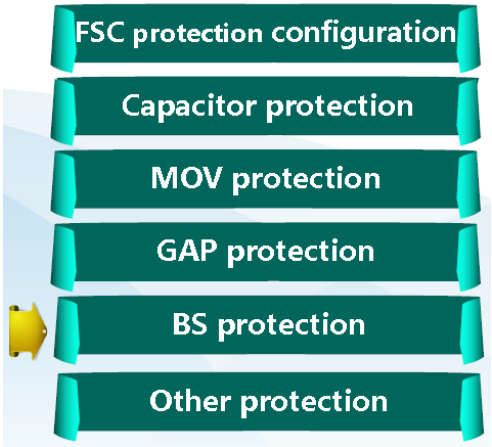

8.5- By-Pass Breaker (BS) Protection:

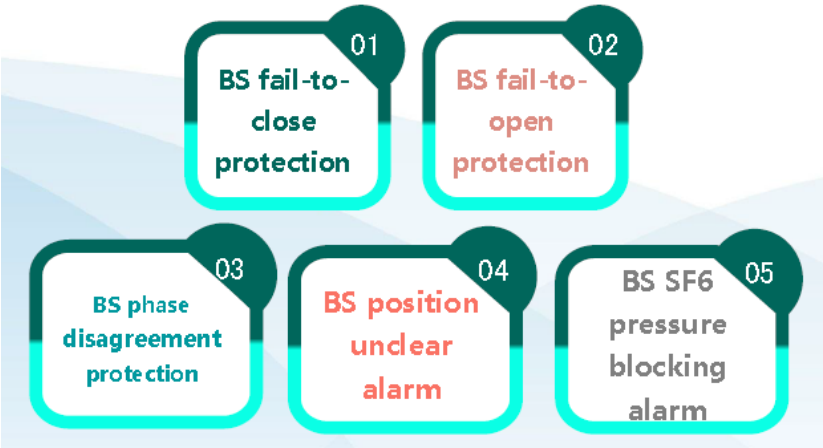

8.5.1- BS fail-to-close alarm: aims to BS closing fault.

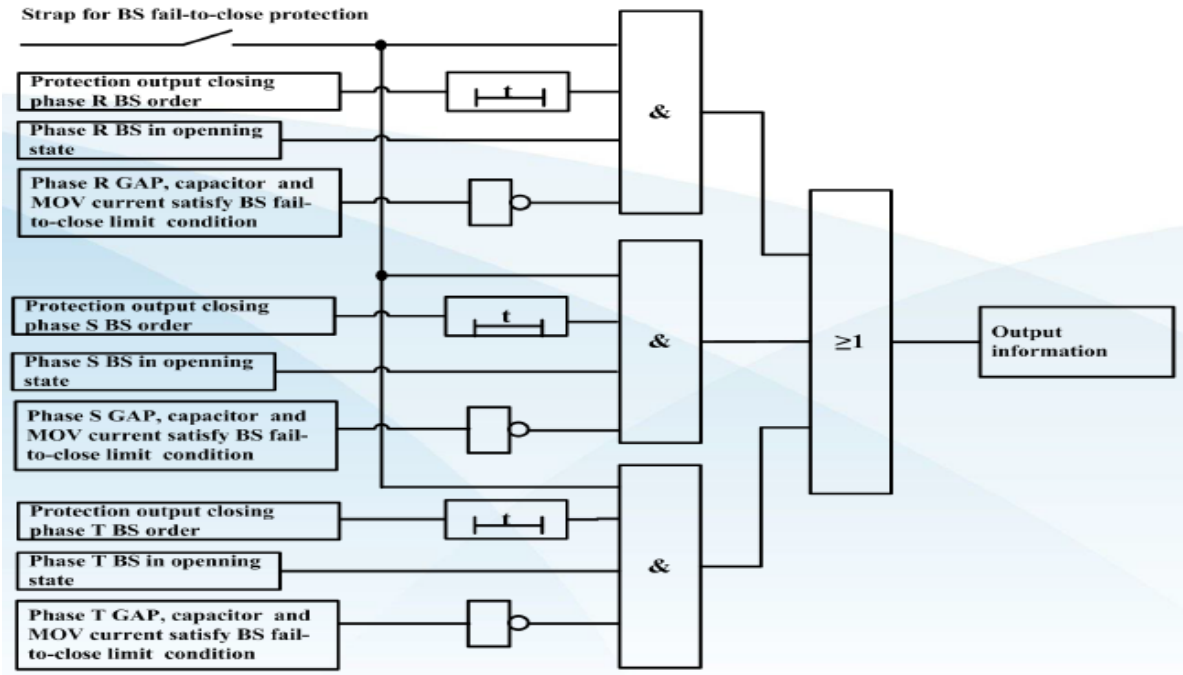

8.5.2- BS fail-to-close protection: aims to BS closing fault.

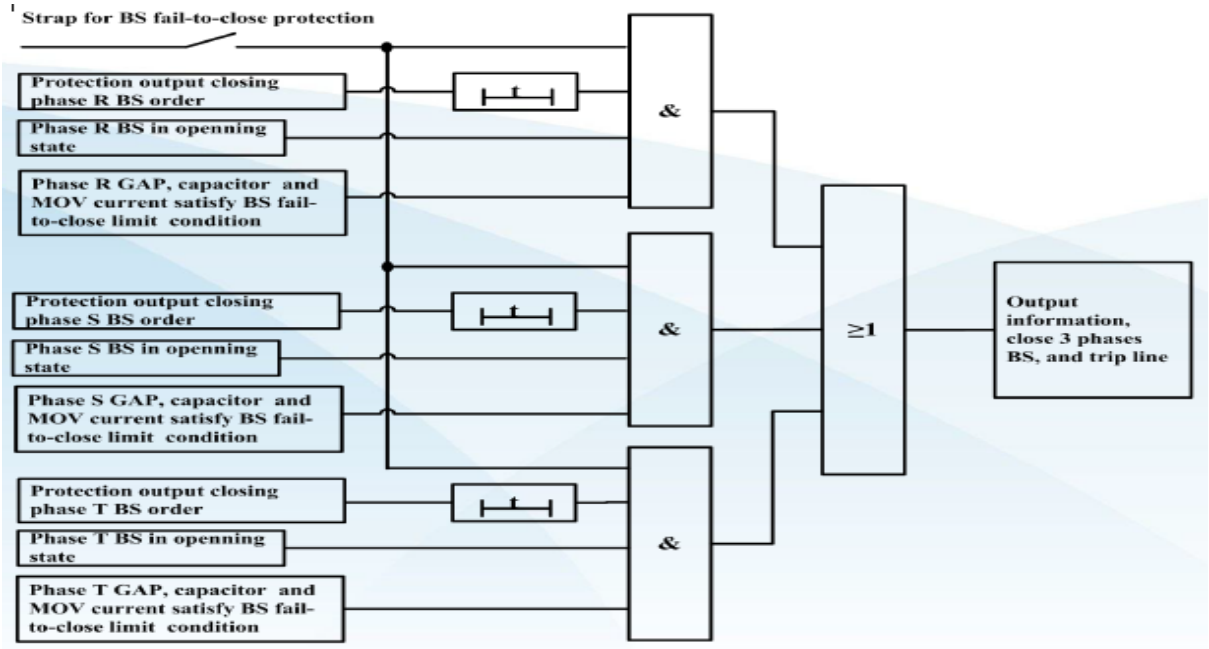

8.5.3- BS fail-to-open alarm: aims to openning BS abnormal

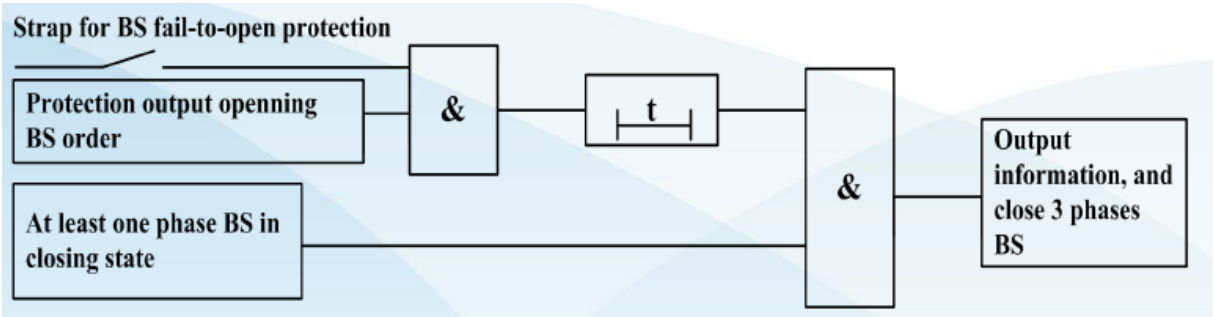

8.5.4- BS phase disagreement protection: aims to 3 phases BS disagreement.

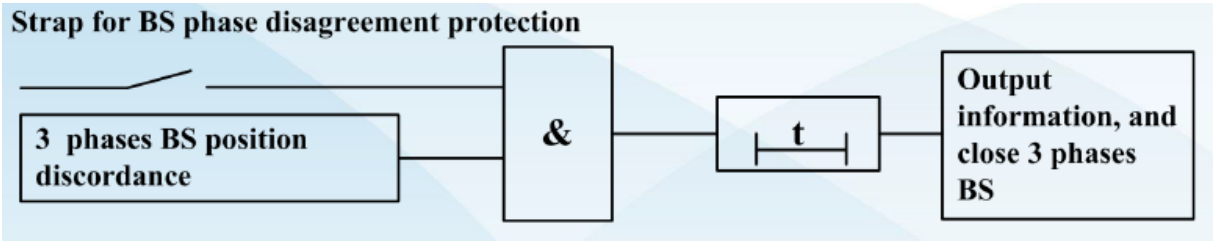

8.5.5- BS position unclear alarm: aims to BS position signals abnormal.

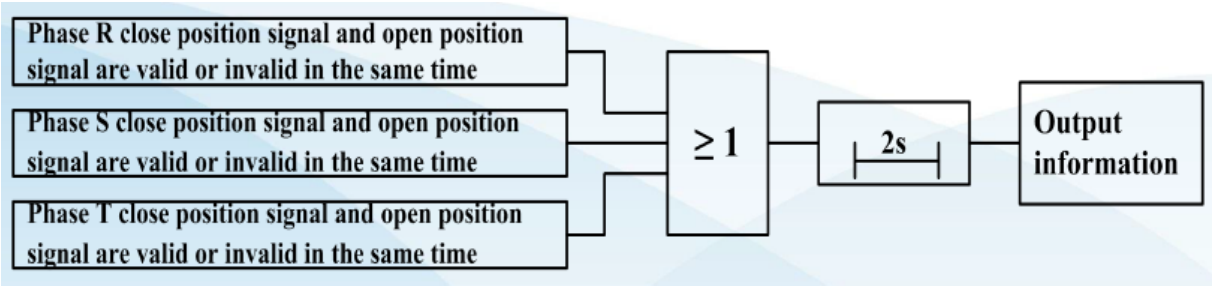

8.5.6- BS SF6 pressure blocking alarm: aims to SF6 pressure low.

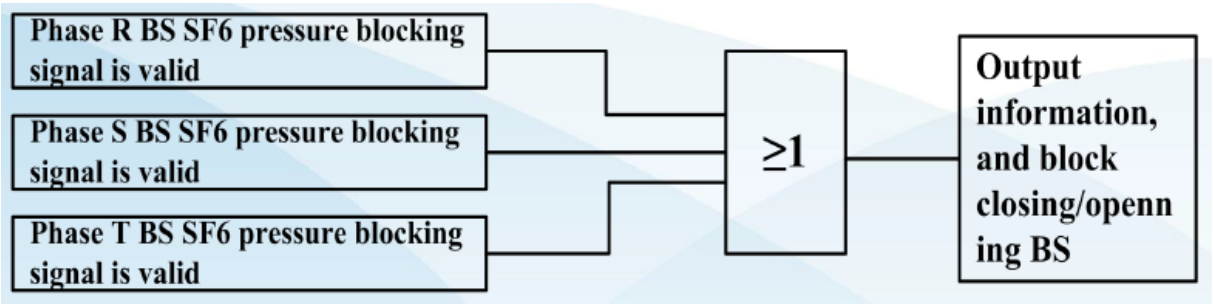

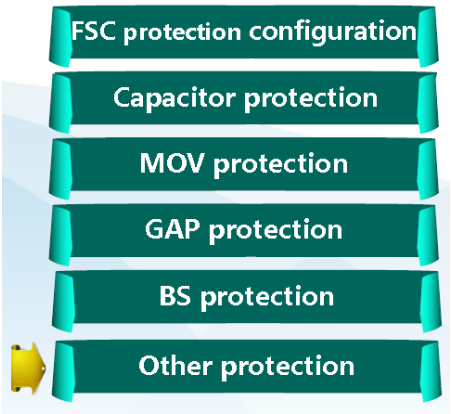

8.6- Other Protection:

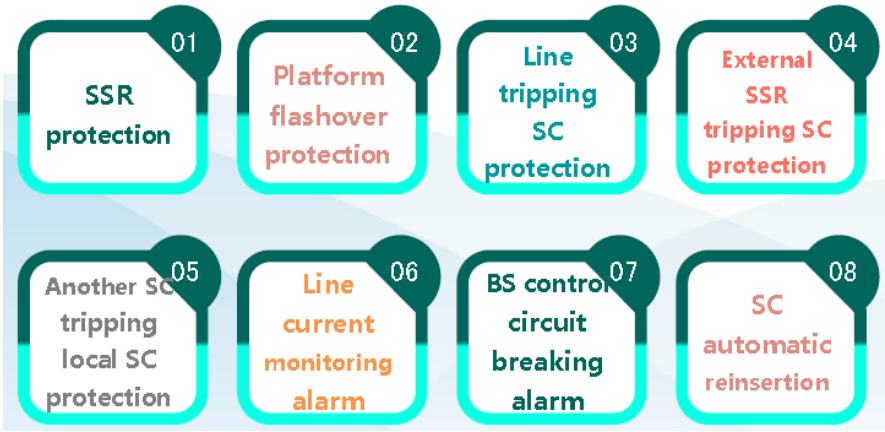

8.6.1- SSR alarm: power system SSR caution.

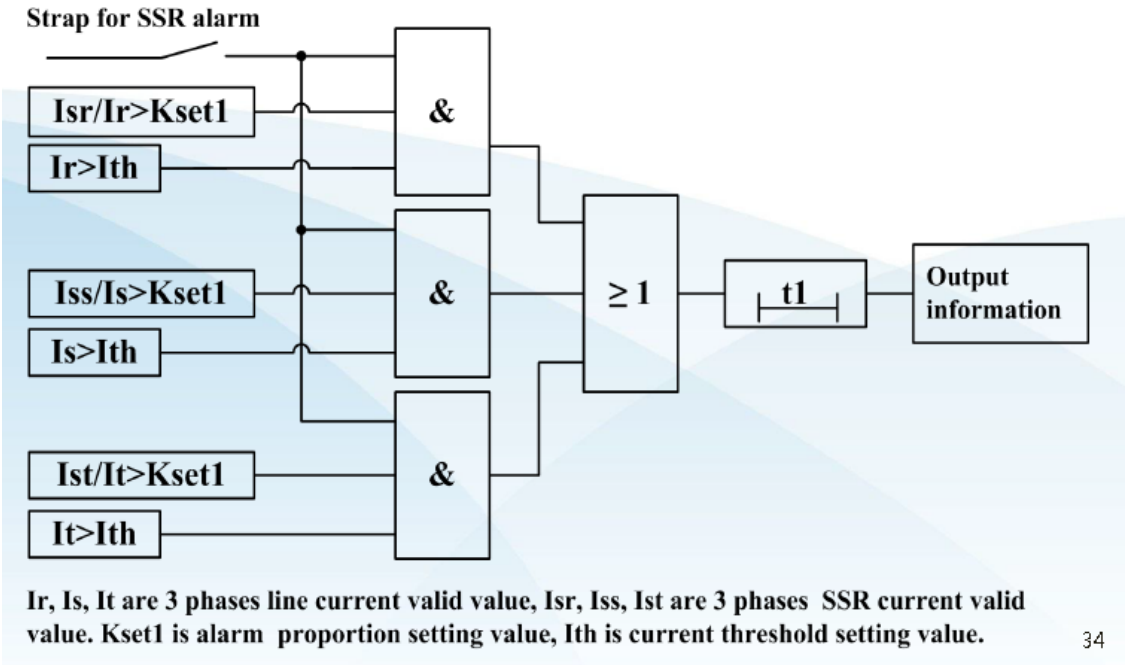

8.6.2- SSR protection: aims to power system SSR to protect FSC.

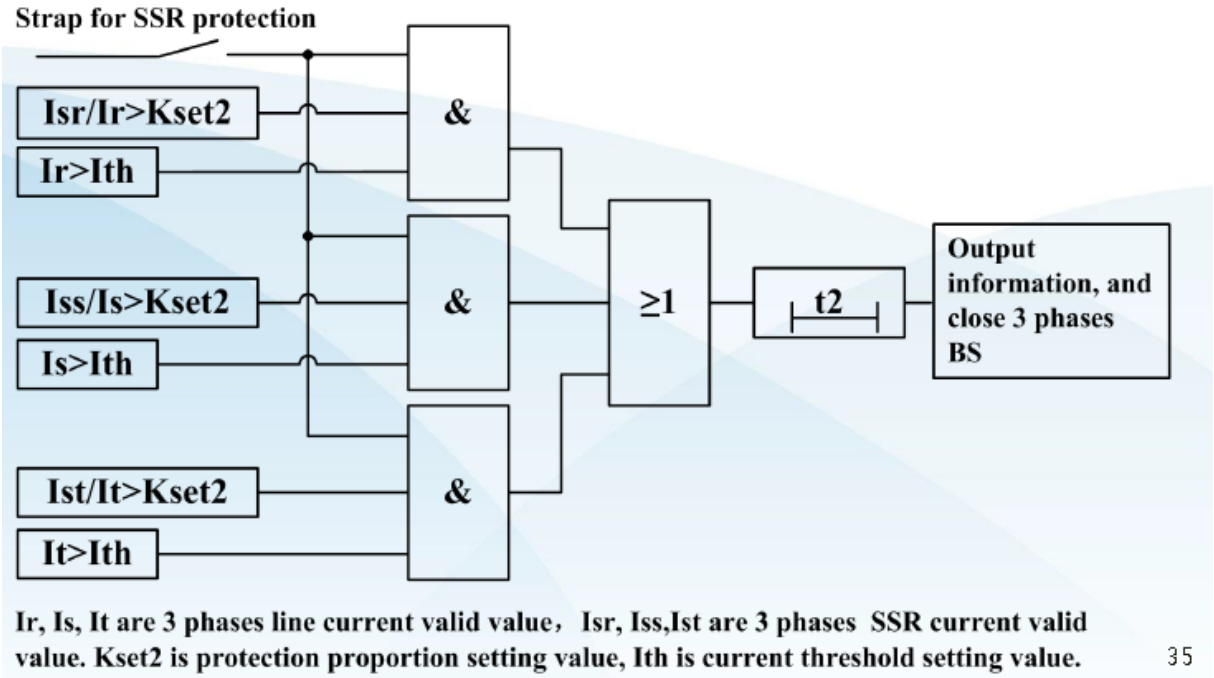

8.6.3- Platforn flashover protection: aims to flashover on platform devices.

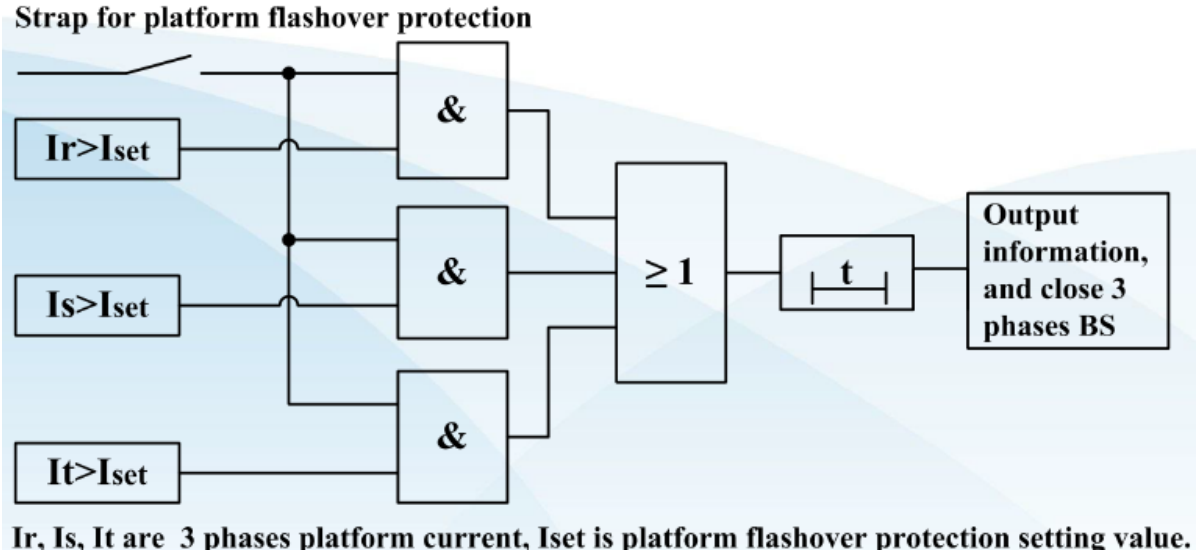

8.6.4- Line tripping FSC protection: aims to power line fault occurring in FSC line, and it cooperates with line operation.

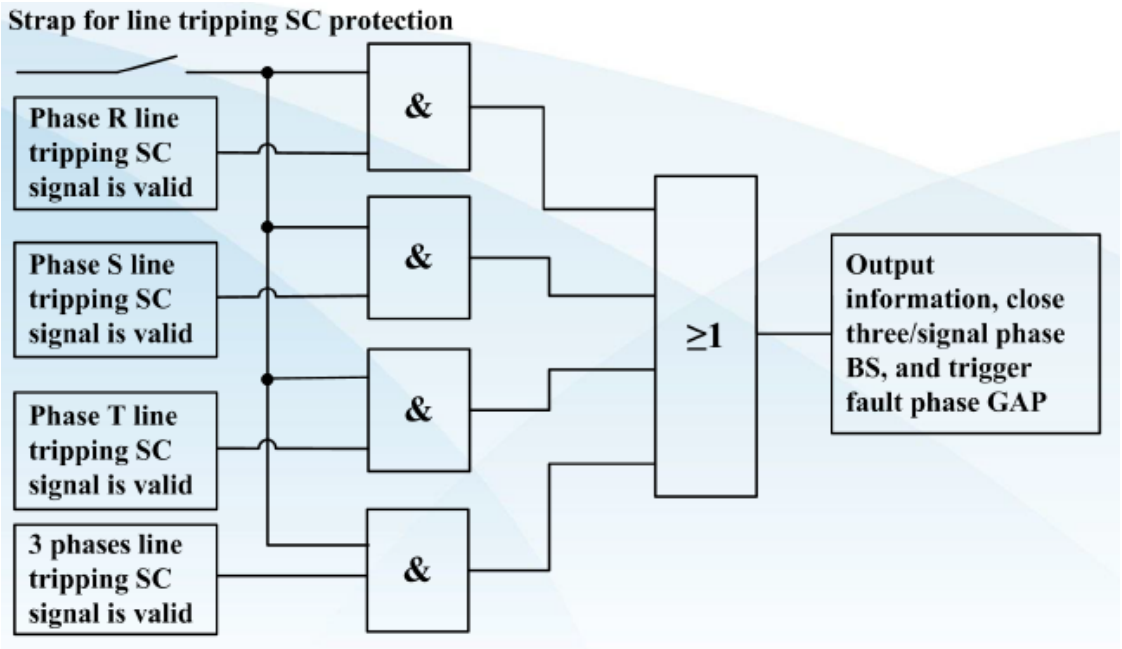

8.6.5- External SSR tripping SC protection: cooperates with power plant SSR protection.

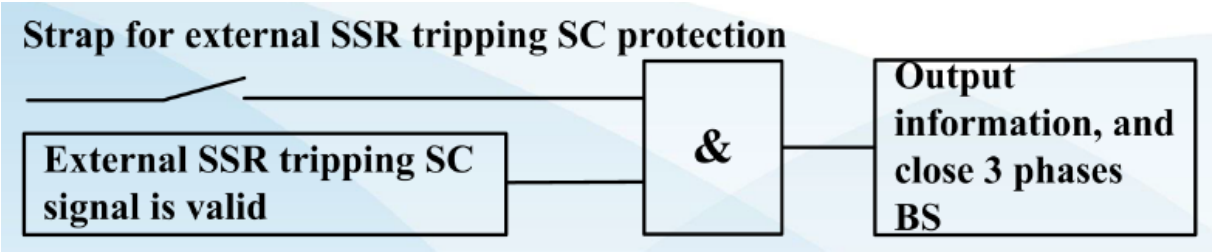

8.6.6- Another FSC tripping local FSC protection: cooperates with another FSC protection in two-segment FSC line.

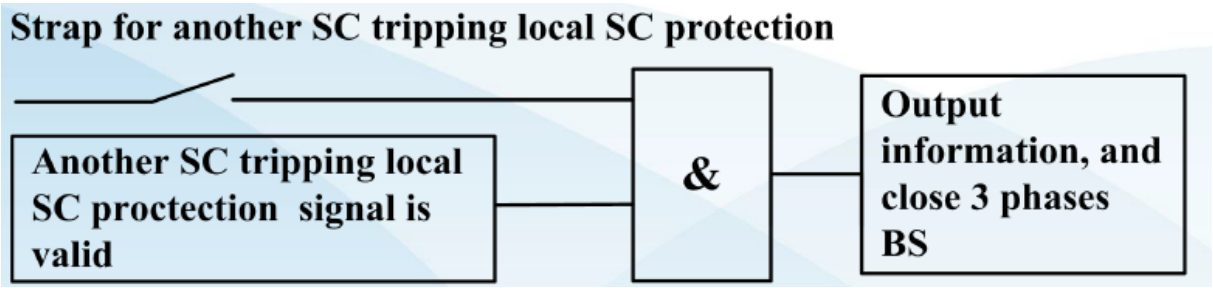

8.6.7- Line current monitoring alarm: prevents FSC to be reinserted in fault power line.

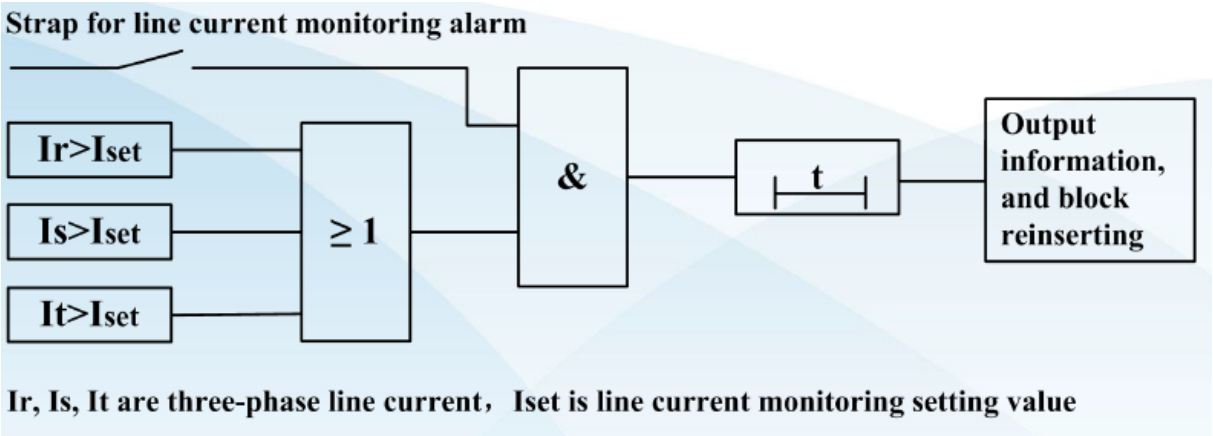

8.6.8- BS control circuit breaking alarm: aims to BS control circuit abnormal.

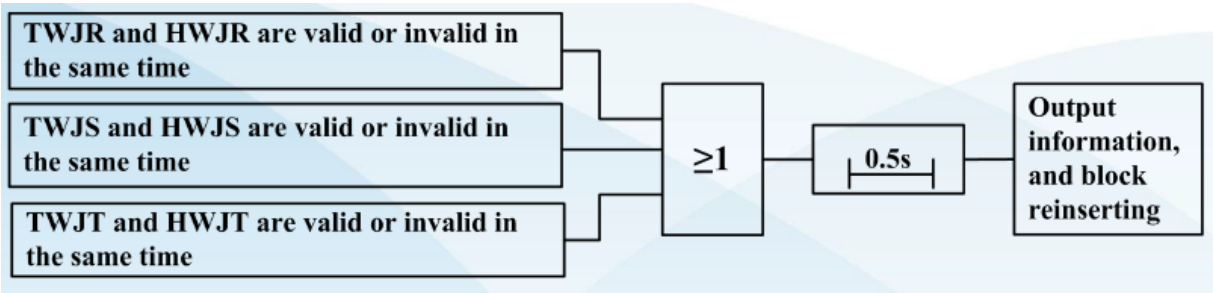

8.6.9- FSC automatic reinsertion: automatically reinserts FSC

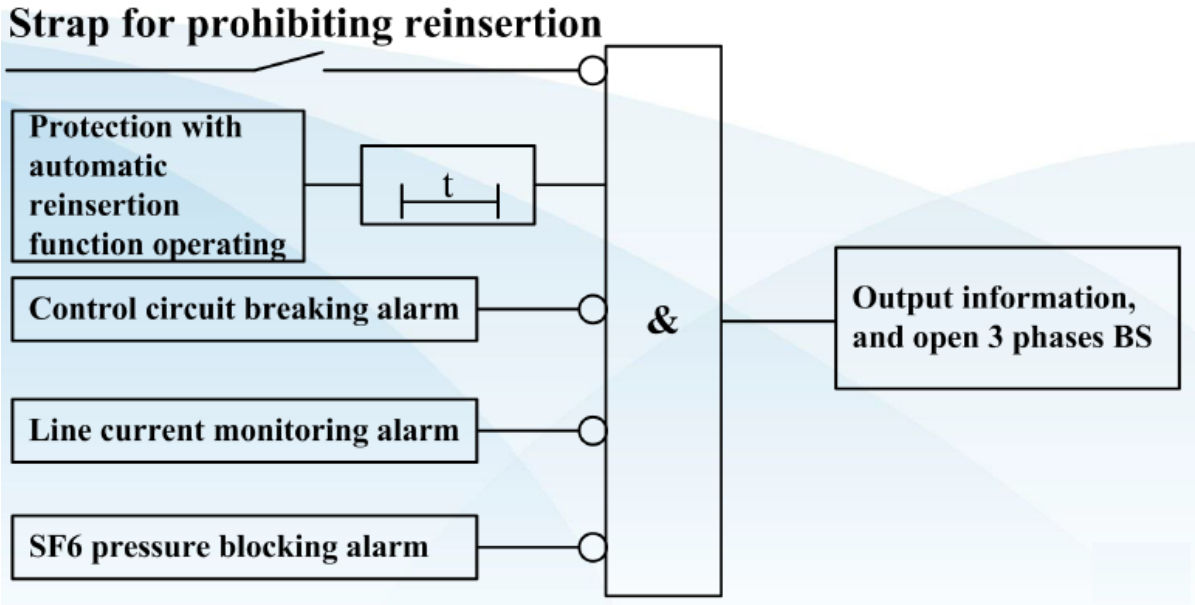

KAYSERİ CAPACITOR BANK PROJECT - EMTA ENERGY

Thanks ☺

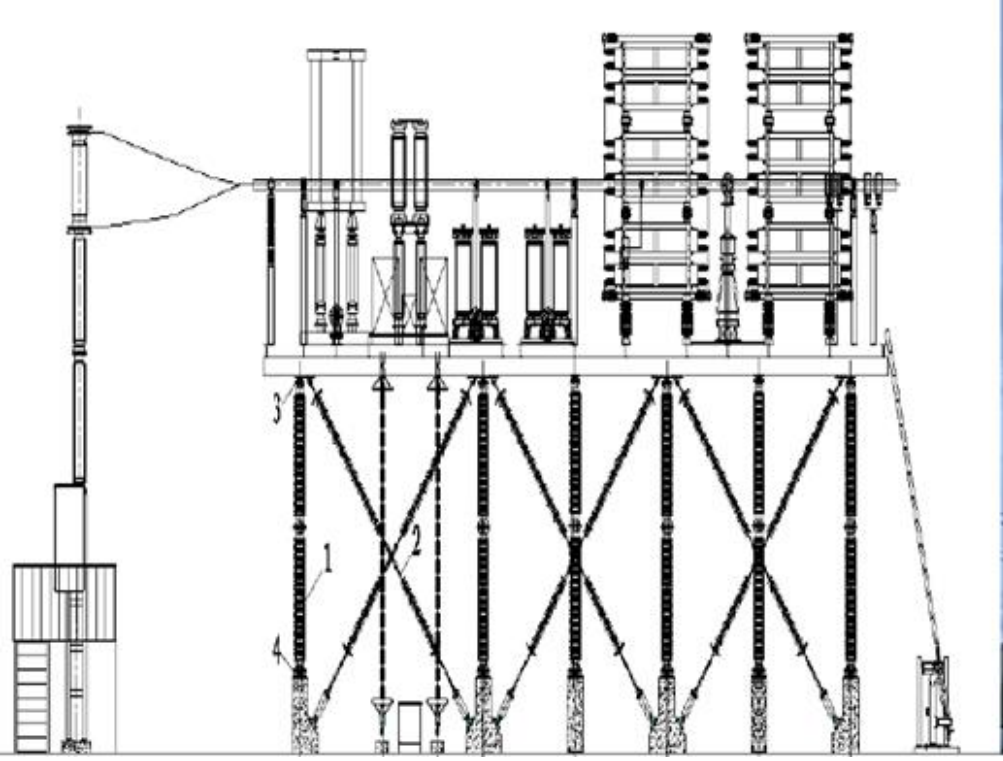

9- FSC INSTALLATION AND ASSEMBLY MANUAL

9.1- Scope

The manual is only for 500kV and below voltage Fixed Series Compensation device (**FSC/FSC device**) produced by China EPRI Science & Technology Co., LTD.

9.2- Product Introduction

The capacitor banks are series connected in the transmission line to compensate the inductive reactance of long line, shorten the electric distance of the transmission line. Transmission lines equip FSC so as to increase system transmission capacity, improve system voltage quality and bring down transmission loss etc.

The FSC device is consist of;

- Steel platform,
- Platform support system,
- Capacitor banks
- Metal Oxide Varistor (MOV),
- Spark GAP,
- Damping device (Damping resistor and reactor),
- Bypass Breaker,
- Series and Bypass disconnectors
- Earth knife etc.

All equipments are encapsulated independently and assembled in the project site, formed the complete series Compensation device finally, as below shown in figüre.

This manual describes the installation process of FSC device detailed putting each equipment as a unit. The detailed parameters of each device refer to the each device's instructions.

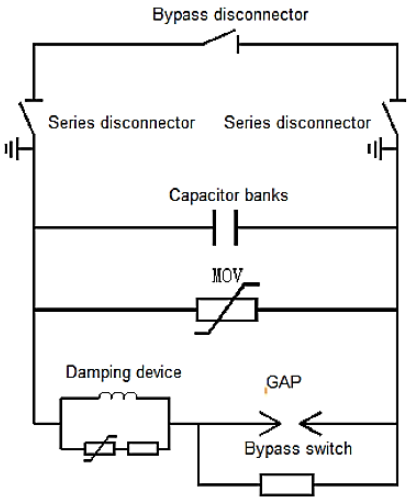

9.3- Installation References

In order to guarantee the installation quality and safety of device, please read the detailed product drawings and technical specification before construction. Product drawing list as follows:

- FSC platform installation drawings.
- FSC electric primary installation drawings.
- FSC electric secondary installation drawings.

9.4- FSC Device Structure Drawings

As customized power equipment, FSC device has no standard module. The typical structure drawings of 500kV and lower voltage FSC devices are shown in fig.4-1 and fig.4-2.

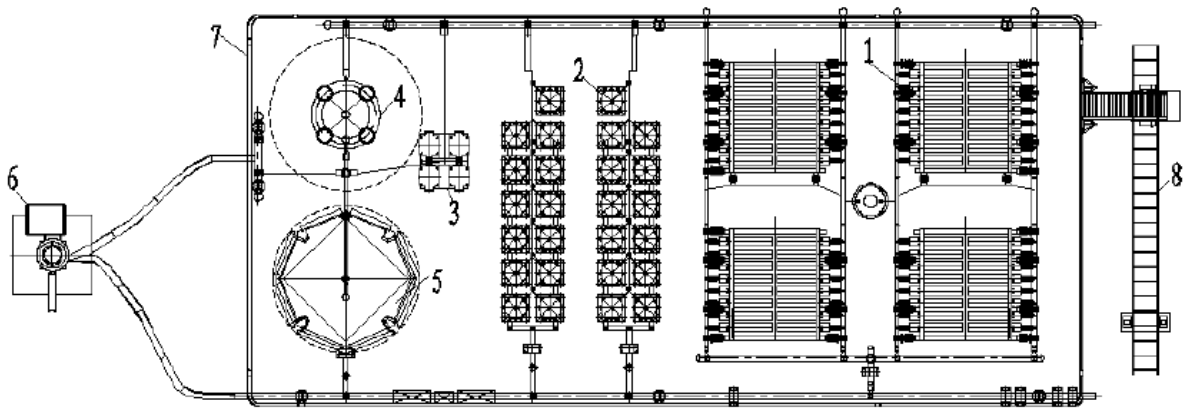

1. Series capacitor 2.MOV 3.Damping resistor 4.Damping reactor
5.GAP 6.Bypass switch 7.FSC platform 8.Ladder

Fig. 4-1.a) Typical layout drawing of one phase FSC device

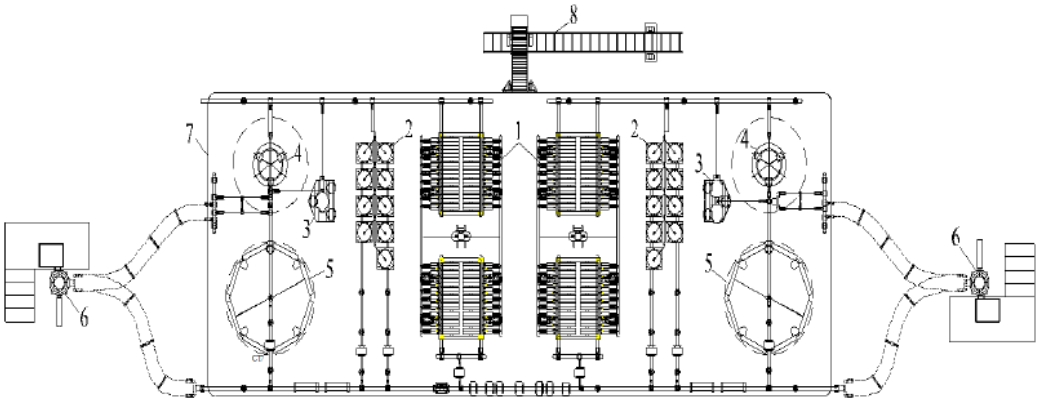

1. Series capacitor 2.MOV 3.Damping resistor 4.Damping reactor
5.GAP 6.Bypass switch 7.FSC platform 8.Ladder

Fig.4-1.b) Typical layout drawing of one phase one platform two sections FSC device

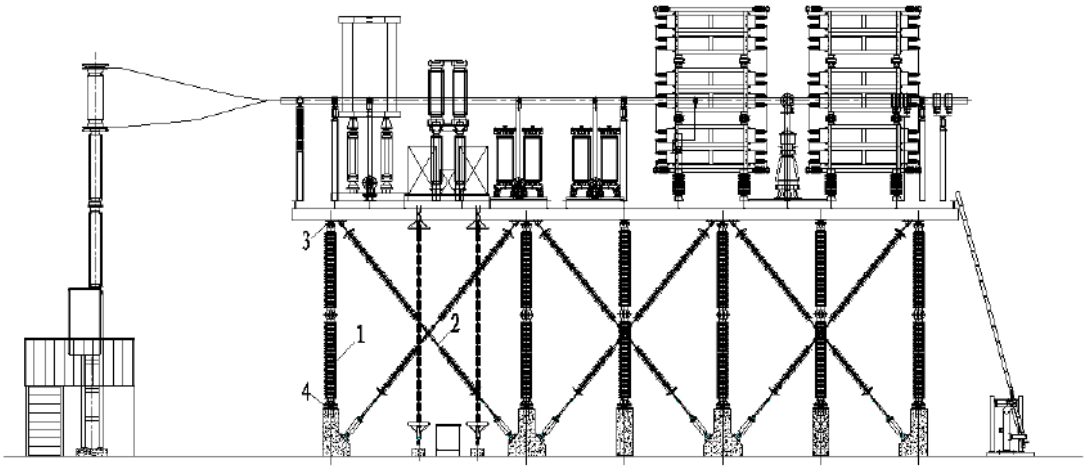

1. Post insulator 2. Composite insulator 3. Upper ball and socket joint 4. Lower ball and socket joint

Fig 4-2.a) Typical section view drawing of one phase FSC device

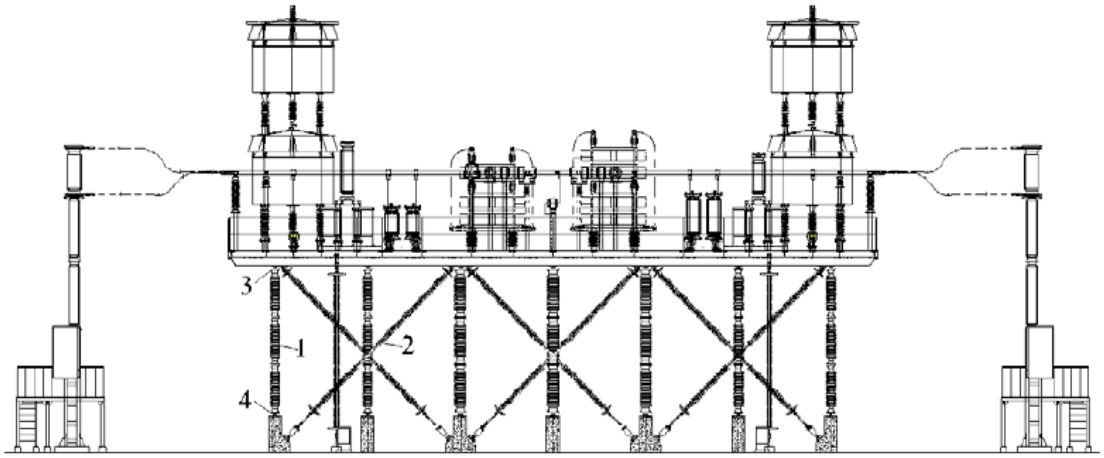

1. Post insulator 2. Composite insulator 3. Upper ball and socket joint 4. Lower ball and socket joint

Fig 4-2.b) Typical section view drawing of one phase one platform two sections FSC device

9.5- Installation and Assembly

All the tools referred in the manual are supplied by user except capacitor terminal wrench and measuring equipment.

9.5.1- General

Main equipments of FSC device are arranged on the FSC platform intensely, switches are arranged on the ground near the FSC platform. The installation of FSC platform and equipments on the platform need hoisting machinery. Considering the operation of hoisting machinery and convenience of equipments installation, nearby site should be smooth and no obstacle before installation of FSC equipments and equipments on the platform.

After completion of FSC platform and equipments on the platform installation, switch devices could be installed near the platform, and the roads, cable trench and fire escape could be constructed. FSC device installation process recommended is as shown in figure 5-1.

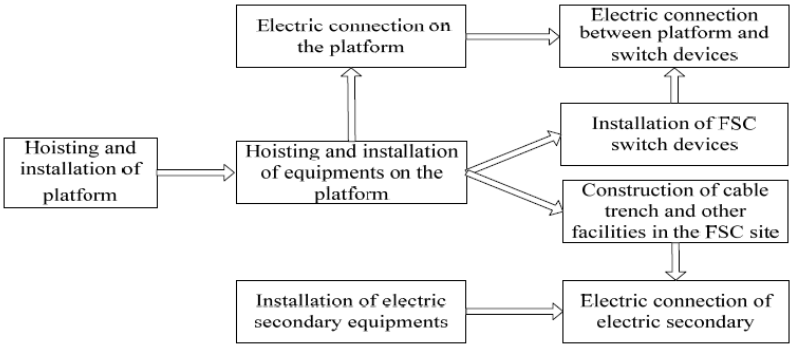

Fig.5-1 Installation process of FSC

9.5.2- FSC Platformu

FSC platformu, elektrik ekipmanlarının kurulumu ve işletimi için taşıyıcı fonksiyonuna sahiptir, bu nedenle de montajının kalitesi çok önemlidir. Bu arada, **platform destek sistemi çok karmaşıktır** ve boyutları çok büyüktür, bu nedenle montaj ve kaldırma işleri sıkı bir şekilde ve çok dikkatli kontrol edilmelidir.

Platformun kurulum süreci Şekil 5-2'deki gibidir:

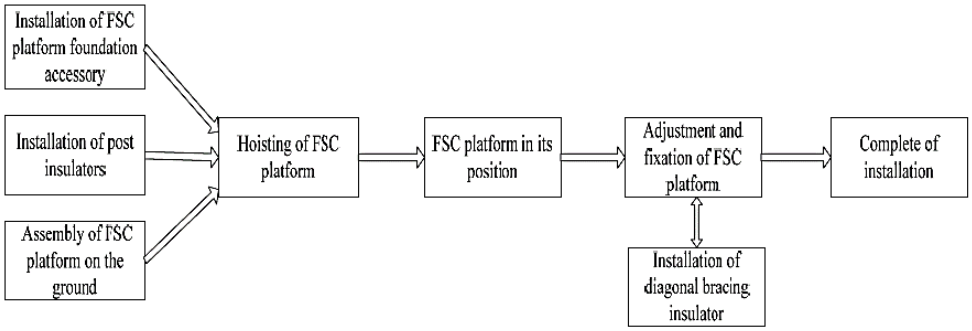

Fig.5-2 Installation progress of FSC platform

9.5.2.1- Installation and Adjustment of FSC Platform Foundation Accessory

FSC platform is fixed on the basis of user-supplied by post insulators and composite insulators. FSC platform accessories connected with foundation should be installed before hoisting platform, which contain lower ball and socket joint (ball), connecting plate, turn buckle and damping spring etc.

a. Pre-installation Check

The platform foundation shall be checked before installation, including measuring the axis deviation. The deviation should be consistent with the requirements of the foundation design drawings. Such as the short pillars surface elevation of FSC platform foundation checking (The construction deviation of the short pillars surface elevation should be no more than 2 mm),

The top surface levelness of FSC platform foundation checking, the anchor bolts location measurement and its' out of the bearing surface length measurement (Each pre-embedded bolt relative height deviation should be no more than 2mm) etc. If these do not meet the requirements, it shall be treated. Foundation surface should be smooth and clean.

b. Tools Preparation

Installation tools: Theodolite, spirit level, socket spanner, spanner and other tools…

c. Installation Procedure

Step 1: Install the lower ball and socket joint (ball) to the corresponding foundation pre-embedded bolts in accordance with the requirements of FSC platform installation drawings, and adjust them with the nuts of pre-embedded bolts. Each ball and socket joint's upper surface in the same phase should be adjusted to the same level according to the requirements of user's design drawings. Installation diagram of lower ball and socket joint (ball) is shown in fig.5-3.

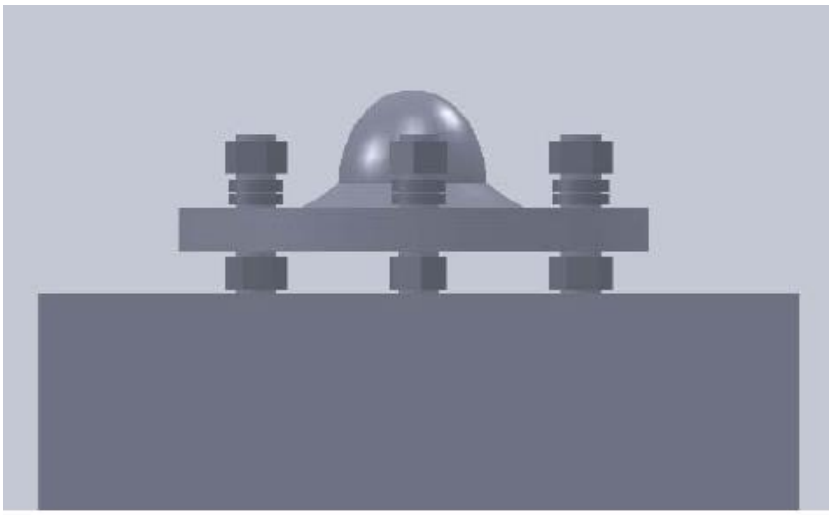

Fig.5-3 Installation diagram of lower ball and socket joint (ball)

Step 2: Connect the connecting plate to the foundation pre-embedded bolts supplied by user.

Step 3: Connect the turn buckle and damping spring (twist turn buckle's screw to both ends of the screw twist to the thread about 10 cm before its installation, keep both ends of the screw lengths are same, and then twist lock nuts). If the turn buckles have be placed for a long time before its installation, it will be suggested that smear the screw with lubricant which is easy for bolt tightening. Connecting screw direction of connecting plate, damping spring and turn buckles should toward the FSC platform inside. The installation diagram is shown in fig.5-4.

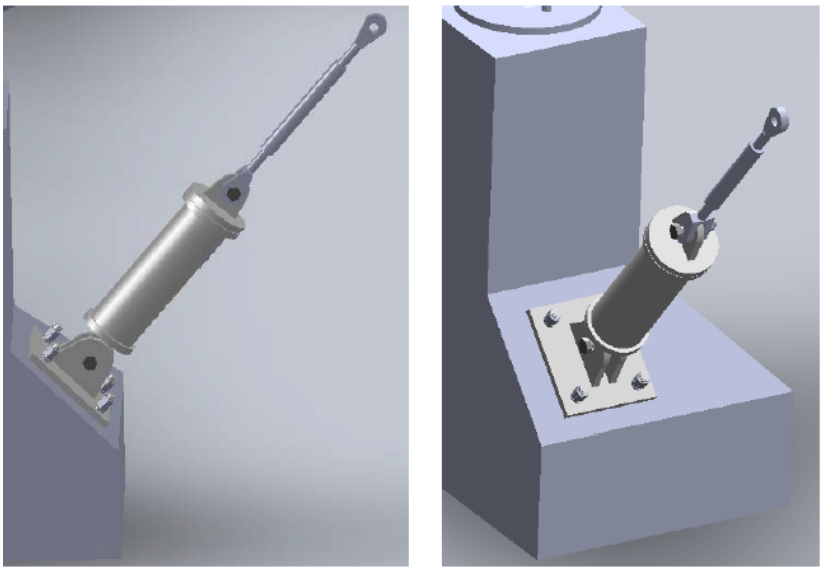

Fig 5-4 Installation diagram of connecting plate, damping spring and flower basket

9.5.2.2- Installation and Adjustment of Post Insulator

a. Pre-installation Check

FSC platform post insulators are large number and bearing significant, it must be controlled the height, the vertical and horizontal position deviation between each post insulator strictly. It must be confirmed once again that the horizontal height deviation of each ball and socket joint in the same phase comply with the design requirements before installation of post insulators.

b. Tools Preparation

Hoisting tool: Hoisting machinery and slings.

Installation tool: 200N•m torque wrenches, theodolite, leveling rulers, socket wrenches, wrenches, crowbars and measuring tapes etc.

Auxiliary materials: Matched construction bolts and dry duster clothes.

c. Installation Procedure

Step 1: In accordance with the requirements of the electrical primary drawings to splice the post insulators, when connecting lower ball and socket joint(socket) and post insulator lower flange, eight installation holes only install four bolts (interval installation).

The bolts installation direction is from bottom to top, screw direction is upward. The bolts installation direction for connecting upper ball and socket joint (socket) and post insulator upper flange is from top to bottom, screw direction is downward. Other screw direction is accordance with the requirements of installation specification.

Tighten bolts to drawings required torque values. Both ends of the post insulator ball and socket joint (socket) can not directly locate on the ground. Guarantee socket surface is bright and clean, no oil pollution, dust or other debris before hoisting.

Step 2: Hoist the post insulators with sling to the foundation, fix the post insulators to lower ball and socket joint (ball) using not installed four mounting holes in the lower flange temporarily.

Step 3: After the arrangement of support insulators, all the platform support insulators must be on the same horizontal level to support the platform equally. Its deviation should be not more than the standard, and the insulators should be adjusted its verticality. After the installation of support insulators, it should be protected (such as protected by cotton blanket).

Step 4: The already installed support insulators' upper and down maximum center circle axis deviation should be less than 10mm, and not greater than the requirements deviation of the adjacent foundation plus 2mm. The deviation between each support insulator top center space and its foundation nominal value is not more than 5mm, and the level deviation between each insulator is not more than 2mm.

Installation diagrams of post insulator are shown in fig.5-5, fig.5-6 and fig.5-7.

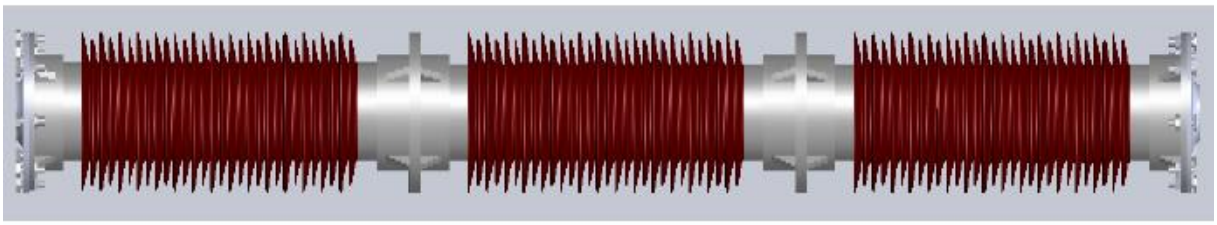

Fig.5-5 Diagram of joining together post insulator and ball and socket joint (socket)

,

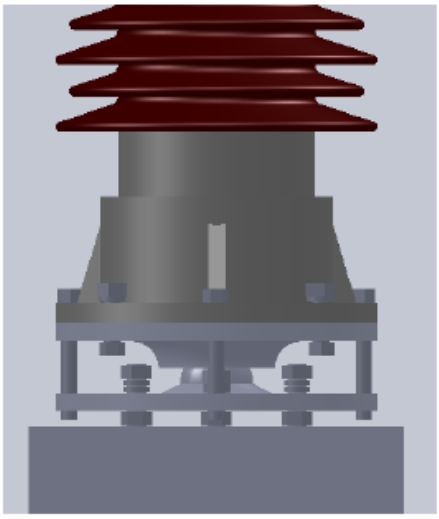

Fig.5-6 Diagram of connecting post insulator and foundation

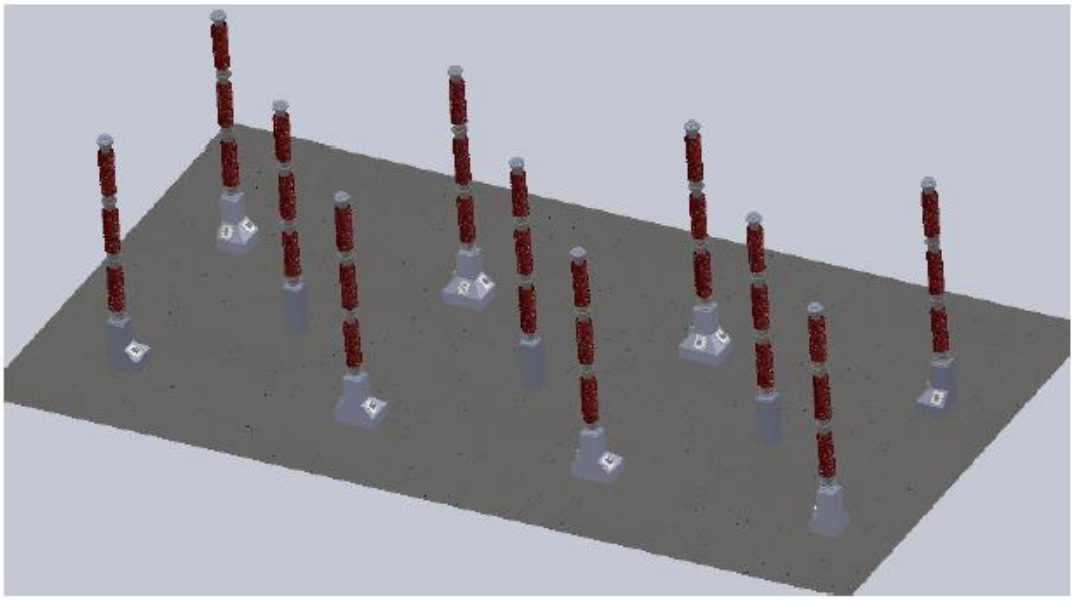

Note: The diagram is just give a sign, the quantity of post insulators will be subject to the drawing.

Fig.5-7 Diagram of complete post insulators

9.5.2.3- FSC platform assemble on the ground

a. Pre-installation Check

Before installation, workers should be familiar with the installation drawings and other relevant documents.

Workers must count and familiar with the number of FSC steel structures platform, check the appearance and size of component, bolt holes and their locations, and the location of the connections. If found component deformation and defects, etc., installation must be done after corrected. Due to the assembly working area is large, it is recommended that all of the installed components should be transported to the assembly working area, and stacked in categorization. Other installation units not for using should not be transported to the area to avoid multiple transportation and damage. The assembly area should be clean, flat and bigger than the platform.

b. Tools preparation

Hoisting tools: Hoisting machinery and sling.

Installation tools: 100N•m torque wrenches, 600N•m torque wrenches, theodolite, leveling rulers, socket wrenches, wrenches, crowbars, measuring tapes and outside hexagonal wrenches.

Auxiliary materials: Matched construction bolts, woods and thin woods.

c. Installation Procedure

Step 1: If needed, joint the main beam sections according to the installation drawings and ensure that the different sections' joints of the same main beam horizontal and vertical alignment. Tighten the bolts according to the drawings. During main beam's joints assembled, the faying surface of each component should be dry, avoid the oil, and work in the rain is forbidden.

Step 2: The woods should be arranged to make sure that each main beam has at least three or four support points, besides there should be a certain height to make convenience to install under the main beam(recommend height not less than 500mm). Pay attention to avoid the position of the main beam under surface may work, when placed wood under the main beam.

Step 3: Hoist the main beam to the support wood, and guarantee level spacing, height between main beams and alignment.

Step 4: Install the upper ball and socket joints (ball) and the fittings of composite insulator on the corresponding position of main beam.

Step5: Check the deviation between the upper ball and socket joints spacing on the main beam and their relevant post insulator spacing.

Step6: Install the outer side and two middle secondary beams, measure the platform diagonals length and adjust these two diagonals to be equal as far as possible. Through the measurement of diagonals, check and adjust the angle. After adjustment, tighten the bolts according to the drawings.During main/secondary beam's joints assembled, the faying surface of each component should be dry, and work in the rain is forbidden.

Step7: Install other secondary beams. Pay attention to the installation progress. If there were two parallel small secondary beams connecting between the two secondary beams, the small secondary beams should be installed firstly and the bolts should not be tightened at this time. After completely jointing, tighten the bolts according to the drawings.

Step 8: Install the busbars and equipments supports on the platform. tighten the bolts according to the drawings. Because of the low voltage tubular busbar with multiple feed-through current transformers, adjust the axial deviation and height deviation between low voltage busbar supports specially when busbars installation, deviation value should be within 3 mm.

Step 9: Install the cable trays. Tighten the bolts according to the drawings.

Step 10: Install the fence around the secondary beam. Tighten the bolts according to the drawings. During platform fence being installed, it is better to leave one side installed at last to transport the grating board conveniently.

Step 11: Install the edge steel plate of secondary beam. Tighten the bolts according to the drawings.

Step 12: Tighten the connection bolts of main beams and secondary beams according to the drawings.

Step 13: Lay the grating board except the hoisting points and install attaching clamps. Adjust the space between grating boards before fasten.

Step 14: Install the rest fences and edge steel plates. Tighten the bolts according to the drawings.

Step 15: Recheck according to the drawings after installation.

- **NOTE-1:** The installation bolts of all attachments of FSC platform main beam bottom flange should wear from bottom to top, screw upwards, the rest bolts installation direction should be according to the installation specification requirements.

- **NOTE-2: All 8.8 degree bolts for FSC platform installation** are prohibited to disassemble and repeatedly. High strength bolts shall be tightening to torque values within 12 h (hours) according to the installation specification requirements after tighten.

- **NOTE-3:** Due to FSC platform is higher off the ground after the completion of hoisting, under the convenience condition, completes the installation of the attachments at the bottom of the platform as far as possible.

- **NOTE-4:** Check torque values of all connection bolts after installation. Because the type and number of connection bolts is large, and in order to avoid missing, the bolts which are tightened should be marked for check. Tighten the bolts must follow the torque values in the drawings.

9.5.2.4- Hoisting FSC Platform

a. The safety Precautions

When platform hoisted, the platform below must not stop. Cranes below must not stop.

b. Pre-hoisting Check

Check the bolts according to the torque values of the drawings. If necessary, check the bolts of the important parts in a random selection, and re-tighten them. Make sure there are not any the attachments, bolts, tools left on the platform. The purpose is to prevent falling.

The assembled platform size and weight:

- 21m×8m (the weight is about 25t).
- 17m×8m (the weight is about 21t).
- 14.5m×8m (the weight is about 18t).

Cranes, the used ropes, and auxiliary materials shall be suitable for the platform load, and have enough redundancy

c. Tool Preparation

Hoisting tools(recommended): Two 50 tons or above 50 tons hoisting machineries, some slings, one hoist truck, ladder and some cable wind ropes.

Installation tools: 200N•m torque wrenches, theodolite, leveling rulers, socket wrenches, wrenches, crowbars, measuring tapes etc.

Auxiliary tools: Matched installation bolts, temporary ground wires, telescopes, etc.

d. Hoisting Procedure

Step 1: Assemble the composite insulators according to the drawings, and then transfer to the hoisting site. Connecting bolt screw should toward the inside of the platform after the complete installation of composite insulators.

Step 2: Connect the slings and FSC platform main beam as shown in fig.5-8. The suspending points are about 2~3 meters from the ends of the platform. To avoid FSC platform deforming as stress concentration in the process of hoisting, for the length of 14,5 m and below platform, suspending point is not less than two on each side, and for the length of 14,5 m above platform, suspending point is not less than four on each side. If the slings are steel materials, the suspending points should be wrapped up with linen or rubber to prevent the galvanization coating.

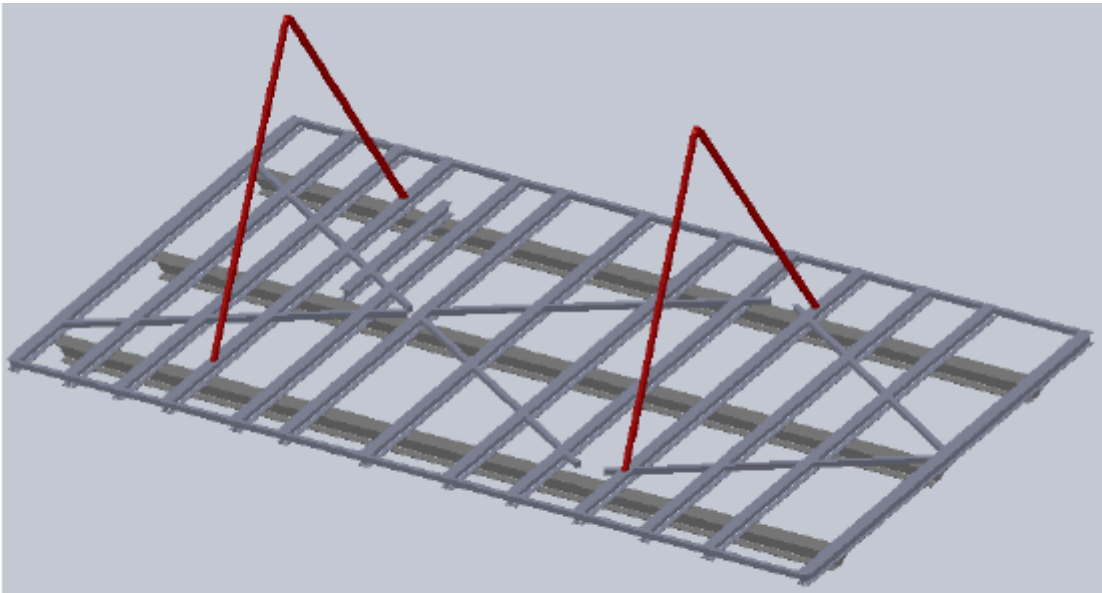

Fig 8-5.a) Hoisting diagram for the length of 14.5 m and below platform

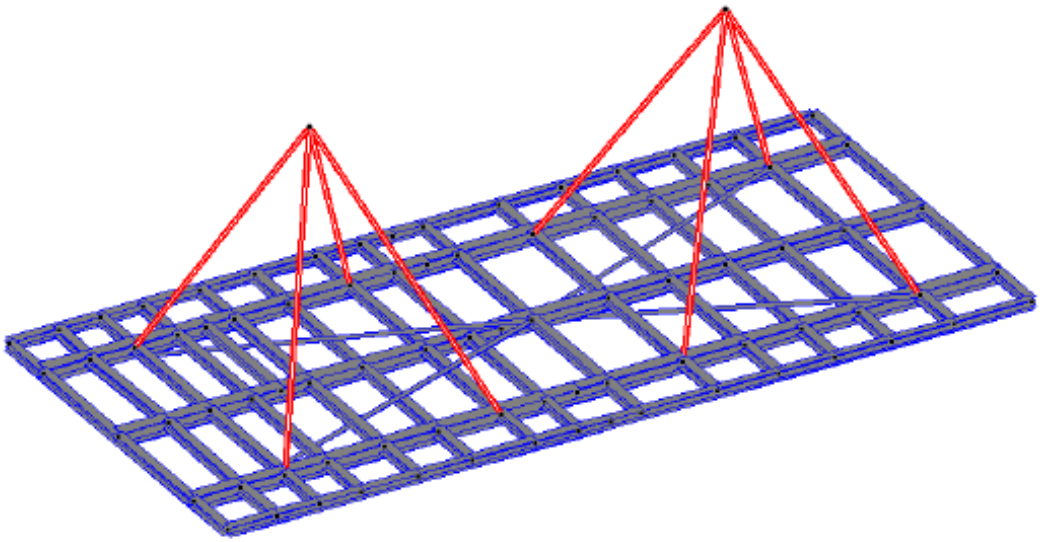

Fig 5-8.b) hoisting diagram for the length of 14.5 m above platform

Step 3: Fasten the hawser cable from longitudinal and transverse direction to prevent the platform swinging.

Step 4: Two hoisting machineries hoist the platform from both sides synchronously. When FSC platform have been hoisted off the ground slightly, observe the levelness of the platform, which should not appear slant, bend torsion and deformation. If appeared above situation, it should immediately stop hoisting and adjust hoisting point or sling.

Step 5: Hoist the FSC platform 1 meter up from the ground slowly and let it stand for observation for a period of time. Continue to rise without exception after that.

Step 6: The platform shall be hoisted above the FSC post insulators and lowered slowly to approx 50mm distance from the support insulator(as shown in fig.5-9), and kept on this level.

Step 7: Observe with the lift truck and telescope in the distance, adjust the FSC platform to ensure that the platform ball and socket joint (ball) face towards the post insulator ball and socket joint (socket) vertically.

Step 8: Lay down one side of the platform slowly, and put the ball on the socket. Meanwhile, adjust the support insulators and fasten the opposite hawser cables.

Step 9: Lay down the other side of platform slowly, in order to make the ball and socket connect completely. Because platform is easy to move horizontally, the hawser cables should be tightened when both ends of the platform are touching the ball and socket joints. At this moment, make sure all insulators are stood the pressure of the platform. The hoisting points should not be loosening.

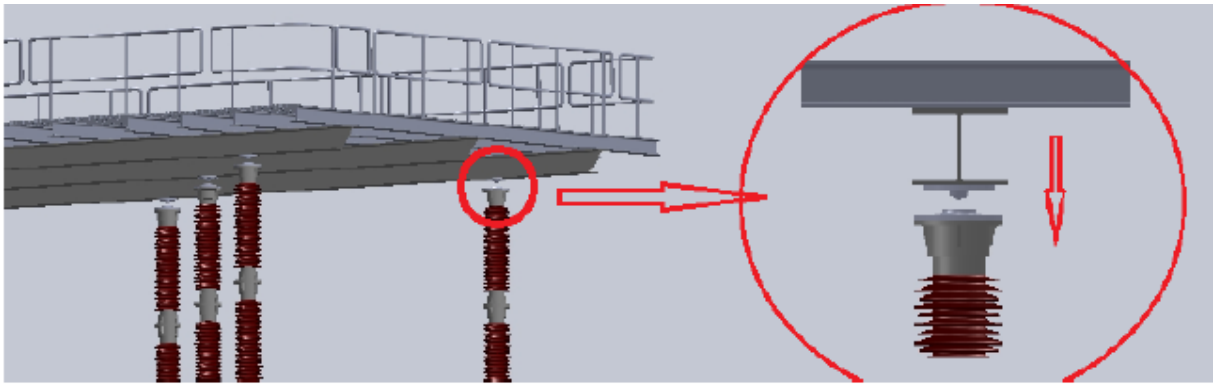

Fig.5-9 Connection diagram of FSC platform and platform post insulators

Step 10: Tighten the hawser cables. Install the composite insulators one by one. The screw is toward the inside of the platform. The diagonal bracing insulators should be not fastened.

Step 11: Adjust the lower ball and socket joints to make the top of insulators in the same level, and tighten the bolts. Before fasten the composite insulators, make sure all of the support insulators are supporting the platform.

Step 12: Use the hawser cables to adjust the horizontal position of the platform and the vertical position of the insulators. The maximum horizontal deviation should be less than 10mm. The support insulator upper and down maximum center circle axis deviation should be less than 10mm.

Step 13: Fasten the composite insulator to the required value on the damping spring, during period of fastening, the pair of composite insulator in same transverse or longitudinal direction shall be fastened at same time, and prevent the platform and support insulator from moving.

Step 14: Dismantle all hawser cables and free the hoisting points.

Step 15: Pre-fasten the composite insulators.

*** First release the turnbuckle on the end of a composite insulator, pre-stressed approximately zero. Then tight turn buckle half circle, and prevent the composite insulator reversing at the same time. Perform the same operation on all pairs of composite insulators. One platform can only release a pair of composite insulators between two support insulators.**

*** Use force measurement device to check the actual tension values of composite insulator (horizontal and vertical actual tensions one set of each sampling at least), the tension values are 15 kN ± 3% (for 300 kN composite insulator) and 8kN ± 3 % (for 240 kN composite insulator).**

It is important to note: The actual tension value is twice of the reading value of force measurement device. The tension values are determined under the 20℃. The ambient temperature must be measured when the adjusting procedures are made. And the measurement and adjustment shall be carried out in no wind weather.

*** After the adjustment completed, re-measure the level of the platform, the vertical support insulators, each support insulators maximum offset difference between the axis of the upper and lower center circle should be less than 10mm.**

Step 16: Because of interaction effect of each insulator, check the measurements again after the above adjustment, and readjust if necessary.

Step 17: Remove temporary bolts of the lower ball and socket joint, connect permanent bolts. Tighten the bolts according to the drawings.

Step 18: Complete hoisting as shown in figure 5-10. After it, install and fix the grating plates.

Step 19: Install the ladder according to FSC platform installation drawings, for subsequent installation works.

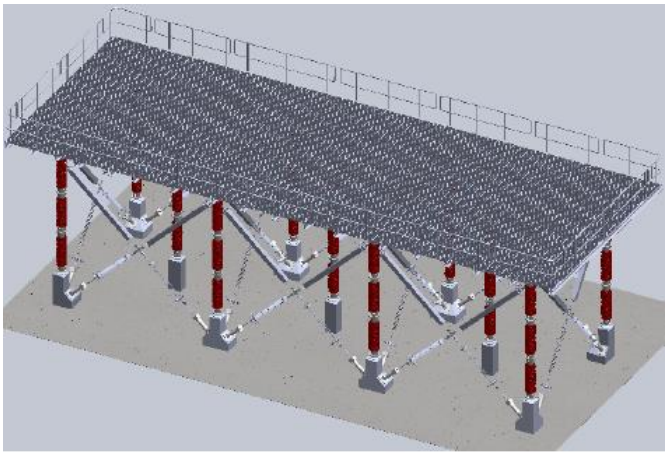

Fig.5-10 Diagram of complete hoisting FSC platform

9.5.3- Electric Equipments

After the platform has been hoisted, install the electric equipments in accordance with the general by the principle of inside-out and from low to high.

The recommended installation progress::

MOV >>> Damping Reactor >>> Damping Resistor >>> Capacitor Bank >>> Spark GAP >>> Current Transformer >>> Optic Fiber Column >>> Busbar and its insulator on the platform >>> Bypass Switch >>> The Connection of Main Circuit

Note: The installation progress could be adjusted according to the construction.

Detailed installation instructions can consult equipment installation manual. Before the installation, check the equipment nameplate according to drawings to prevent equipment installation dislocation.

9.5.3.1- Metal Oxide Varistor (MOV)

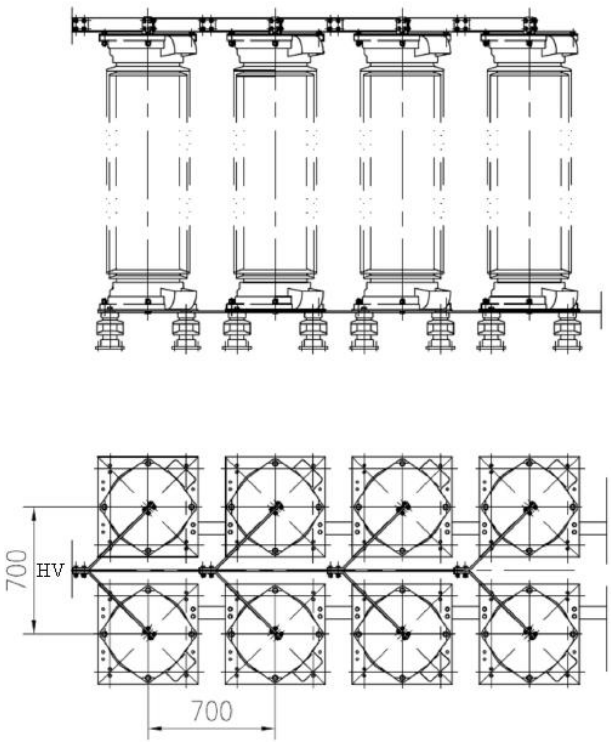

a. Package and inspection

After the arrival of the equipments, classify the different phase according to the packaging instructions. Remove the package to confirm the shipping list and accessories, and check the products with no scratches and damage.

b. Tool Preparation

Hoisting tools: Hoisting machinery and slings.

Installation tools: 200N•m torque wrenches, socket wrenches and wrenches.

Auxiliary materials: Matched installing bolts, connecting busbars and fittings.

c. Installation Procedure:

Step 1: Install MOV in the same phase.

Step 2: Connect the MOV unit low voltage terminal.

Step 3: Connect the MOV unit high voltage terminal.

Step 4: Connect the wires and tighten the bolts according to the drawings

9.5.3.2- Sönümleme Reaktörü

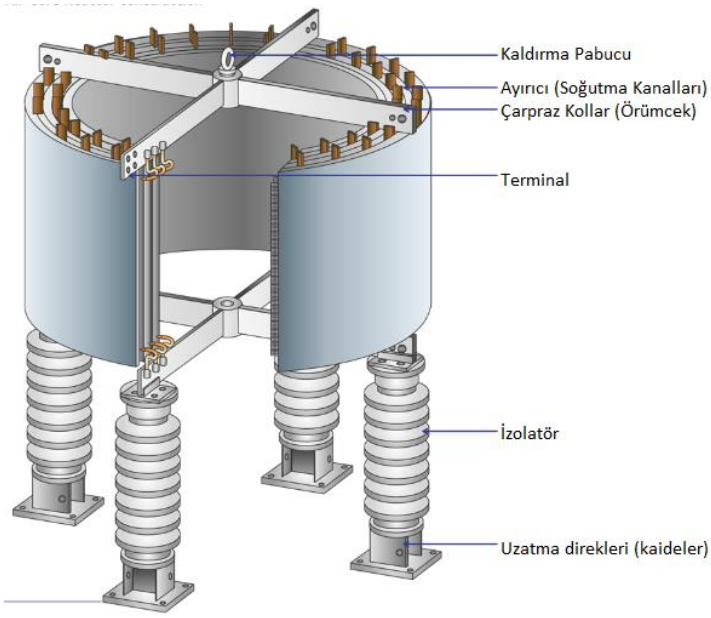

a. Package and inspection

Check the equipment nameplates according to drawings, and check the products with no scratches and damage.

b. Tool Preparation

Hoisting tools: Hoisting machinery and slings.

Installation tools: 200N•m torque wrenches, socket wrenches and wrenches.

Auxiliary materials: Matched installing bolts, connecting busbars and fittings.

c. Installation Procedure

Step 1: Install the reactor transition support and the support insulators. The bolts should not be tightened at this time.

Step 2: Install the body of reactor. The direction of each phase reactor in the same line should be same.

Step 3: Connect the wires and tighten the bolts according to the drawings.

9.5.3.3- Damping Resistor

a. Package and Inspection

Check the equipment nameplate according to drawings, and check the products with no scratches and damage.

b. Tool Preparation

Hoisting tools: Hoisting machinery and slings.

Installation tools: 200N•m torque wrenches, socket wrenches， wrenches, soft wire crimping machine and related molds.

Auxiliary materials: Matched installing bolts, connecting busbars and fittings.

c. Installation Procedure

Step 1: Install the resistor support insulators. The bolts should not be tightened.

Step 2: Install the body of resistor. The direction of each phase resistor in the same line should be same.

Step 3: Connect the wires and tighten all bolts as required torque values in the drawings

9.5.3.4- Capacitor Banks

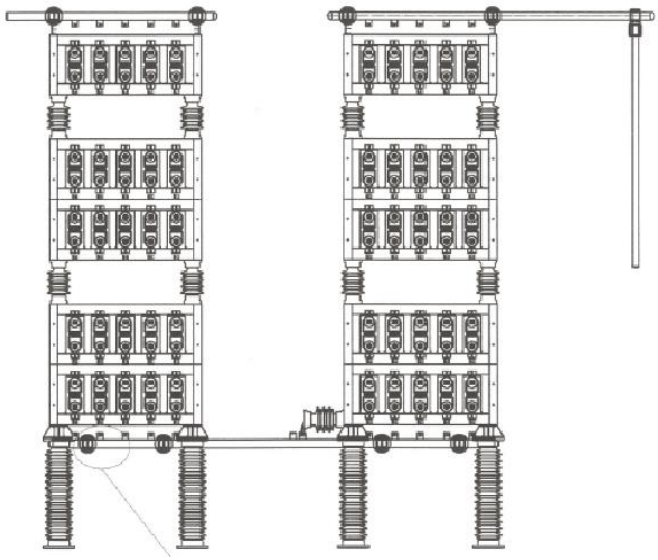

a. Package and Inspection

Step 1: After the arrival of the equipments, classify the different phases according to the packaging instructions.

Step 2: Unpack and hoist the capacitor banks, pay attention that the bushing should not be damaged.

Step 3: Check the nameplates according to drawings. And check the appearance, leakage of Shell and bushing, parts and components.

b. Tool Preparation

Hoisting tools: Hoisting machinery and slings.

Installation tools: 200N•m torque wrenches, socket wrenches， wrenches, tape measures, scissors, wallpaper knives, crimping pliers and other tools.

Auxiliary materials: Matched installing bolts, connecting wires and accessories.

c. Installation Procedure

Note: Pay attention to prevent bushing from being struck in any situation, as shown in fig.5-11:

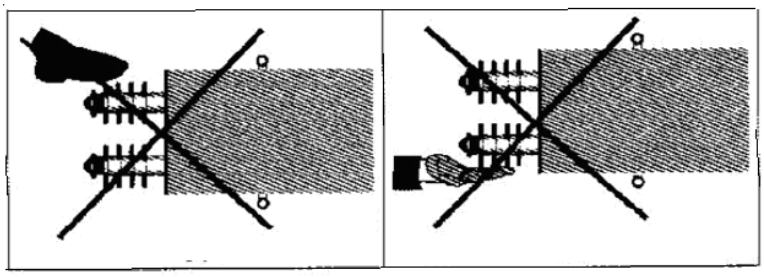

Fig.5-11 Prohibitions of capacitor installation

Step 1: Install the capacitor in the specified position of capacitor frame according to the drawings. Any change is forbidden.

Step 2: Hoist the capacitor bank frames to the specified position on the platform inside-out, from bottom to top. Any change is forbidden. Note and adjust the levelness and verticality of capacitor banks during installation.

Step 3: Tighten all bolts as required torque values in the drawings.

Step 4: Connect the wires according to the drawings.

- The distance between conductor and the tops of the bushings must be at least 120mm.
- The Cu-Al composite board is needed when the connection between Cu material and Al material.
- The tightening torque of the capacitor bushing must be followed the request, otherwise, the life of capacitor will be shortened.

9.5.3.5- Spark GAP

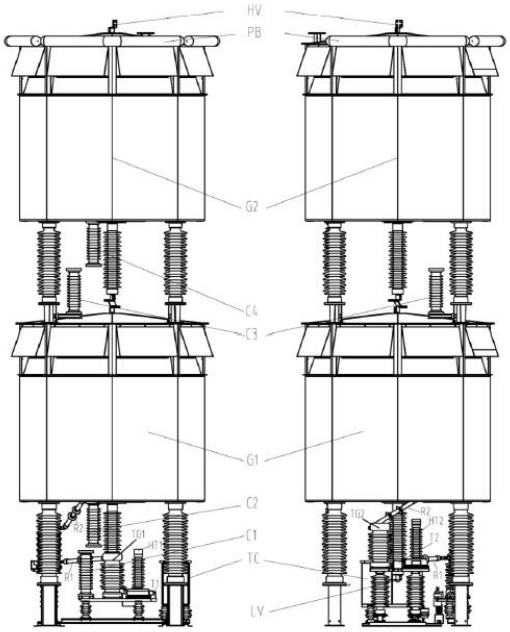

a. Package and Inspection

Step 1: Check the shell with no scratches and damage.

Step 2: Check all parts with no scratches, and damage.

b. Tool Preparation

Hoisting tools: Hoisting machinery and sling.

Installation tools: 200N•m torque wrenches, socket wrenches and wrenches.

Auxiliary materials: Matched installing bolts, connecting wires and accessories

c. Installation Procedure

Step 1: Assemble the GAP on flat ground.

Step 2: Hoist the shell of GAP and install the wall bushing from bottom.

Step 3: Install the shell of GAP on the support insulators.

Step 4: Lay the GAP down smoothly on the ground.

Step 5: Install the internal components under the instruction of supplier.

Step 6: Hoist and install the control box on the platform. The bolts should be tightened according to drawings.

Step 7: Hoist and install the assembled GAP on the platform. The bolts should be tightened according to drawings.

Step 8: Connect the wires and tighten all connection bolts according to the drawings.

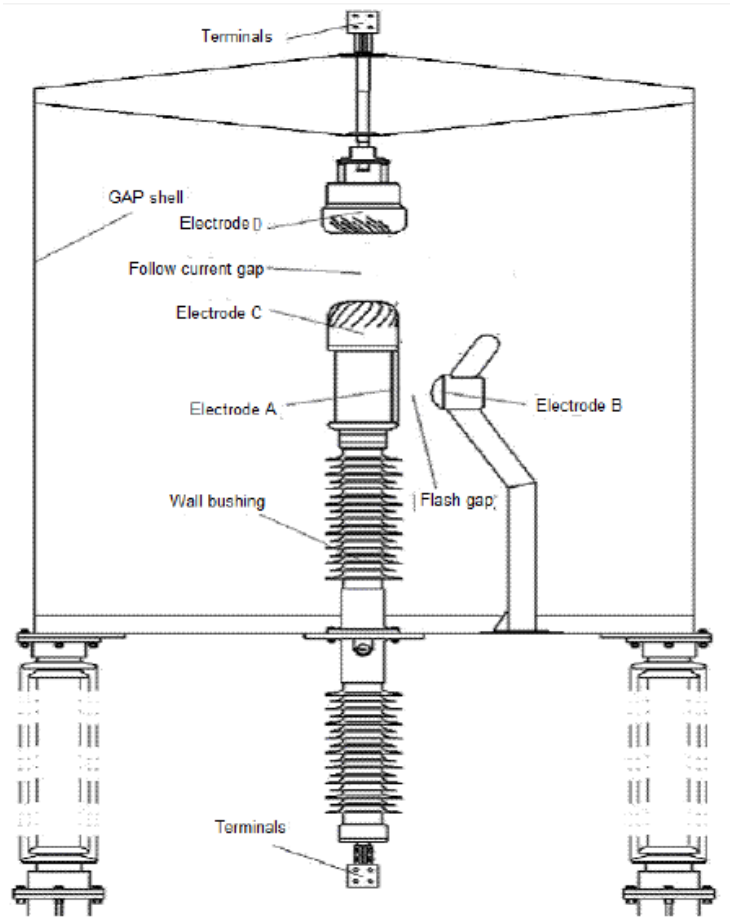

Fig.5-12 Structure diagram of GAP

9.5.3.6- Current Transformer (CT)

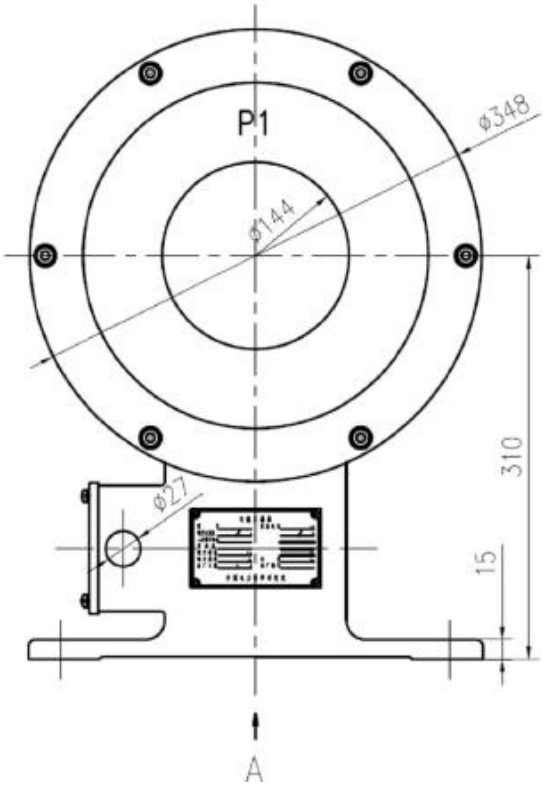

a. Package and Inspection

Step 1: Check the products with no scratches and damage.

Step 2: Check the equipment nameplates according to drawings.

b. Tool Preparation

Hoisting tools: Hoisting machinery and slings.

Installation tools: 100 N•m torque wrenches and wrenches.

Auxiliary materials: Matched installing bolts.

c. Installation Procedure

Step 1: Hoist the CTs to the platform.

Step 2: Install the CTs on the platform according to the drawings.

Step 3: Tighten all connection bolts according to drawings.

Note: For installing convenience, the bolts of CT on low voltage busbar could not be tightened before the installation of low voltage busbar finished.

9.5.3.7- Optic Fiber Column

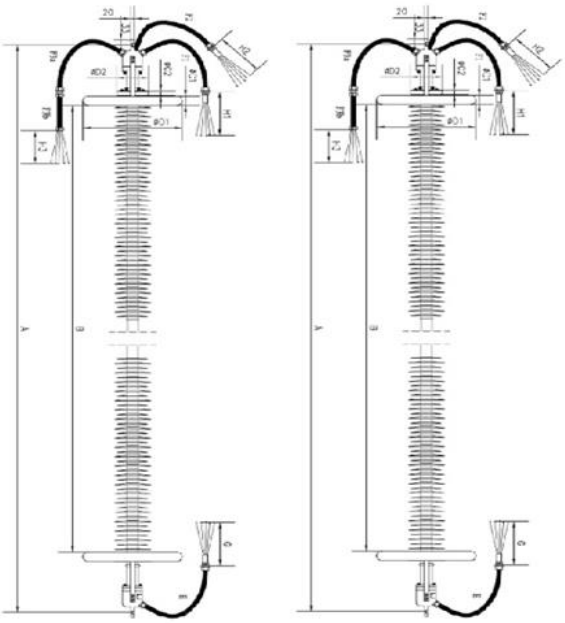

a. Package and Inspection

Step 1: Check the package integrity.

Step 2: Check the products with no scratches and damage.

b. Tool Preparation

Hoisting tools: Hoisting machinery and slings.

Installation tools: 100 N•m torque wrenches, hexagon wrenches and wrenches.

Auxiliary materials: Matched installing bolts.

c. Installation Procedure

Step 1: Install the corona ring of the upper terminal flange.
Step 2: Hoist the optical column.
Step 3: Install the corona ring of the lower terminal flange.
Step 4: Install the spring parts.
Step 5: Adjust the spring parts.

Note: During the period of corona ring installation, the package for optical protection should not be unpacked. Taking end fiber must be handled with great care. It is forbidden to pull or extrusion optical fiber. Avoid injuring tail end of the fiber

9.5.3.8- The Busbar and its Post Insulator

a. Package and Inspection

Step 1: Check the insulator package integrity.
Step 2: Check the insulators with no scratches and damage.
Step 3: Check the busbar package integrity.
Step 4: Check the busbar with no scratches and damage

b. Tool Preparation

Hoisting tools: Hoisting machinery and slings.
Installation tools: 200N•m torque wrenches, welding machines for aluminum materials (If required) and wrenches.
Auxiliary materials: Fittings to fix busbar and matched installing bolts.

c. Installation Procedure

Step 1: Install the LV and HV insulators on the support.
Step 2: Weld or cut the busbar according to the drawings.
Step 3: Install the busbars on the low voltage and high voltage insulators.
Note: The low voltage busbar should go through the CT. When install, use the cotton wrapped the bus to prevent damage the CT.
Step 4: Tighten all bolts with required torque values according to the drawings.

9.5.3.9- Bypass Switch (ABB)

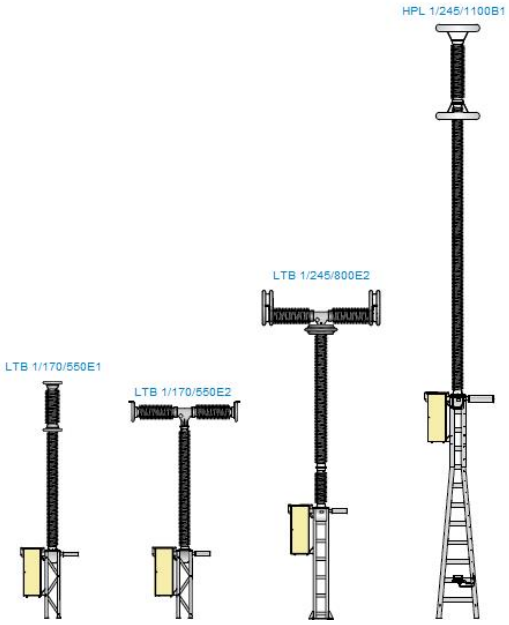

a. Package and Inspection

Step 1: Check the package integrity.

Step 2: After the arrival of the equipment, classify the different phases according to the packaging instructions.

b. Tool Preparation

Hoisting tools: Hoisting machinery and slings.

Installation tools: 200N•m torque wrenches and wrenches.

c. Installation Procedure

Step 1: Transport the same phase of the bypass switch and its accessories with package to the installation area.

Step 2: Hoist the bypass switch under the guidance of the manufacturers.

Step 3: Tighten the bypass switch mounting bolts with torque values in accordance with the manufacturers of staff and equipment specification requirements.

9.5.4- Control and Protection System

a. Package and Inspection

Step 1: Check the package integrity.

Step 2: After the arrival of the equipment, classify the different phases according to the package instructions.

b. Tool Preparation

Hoisting tools: Hoisting machinery and slings.

Installation tools: torque wrenches, wrenches, wire cutters, cable pliers, wire stripper, screw driver and test pen etc.

c. Installation Procedure

Step1: Transport the control protection cabinets to the installation position, using bolts to connect to the foundation provided by user.

Step 2: Lay the optical cable, cable and network cable, etc. according to the drawing.

Step 3: Connect the optical cable, cable and network cable, etc.

Step 4: Check the connecting circuits to make sure their correctness.

9.6- Safety Precautions

- When work near the adjacent live line, reserve enough hoisting safety distance and configure the grounding line to prevent to get an electric shock caused personal injury.
- When doing porcelain pieces of equipment operation, pay attention to protect surface of porcelain, prevent the collision, smite damage to equipment.
- When doing composite insulators operation, prevent sharp objects to scratch, cut equipment.
- When hoisting FSC platform, when the platform is not fall on post insulators completely, strictly prohibit people staying below the platform.
- After the completion of hoisting FSC platform, when working on FSC platform, strictly prohibit throwing out debris from the platform.
- When working on FSC platform, the tools and installation accessories should be prevented to falling.
- When working on FSC platform, cross-operating with the area should be avoided.
- When the capacitor installation works, torque requirements must be strictly enforced to prevent excessive torque damage equipment, when tightening capacitor bushing terminal.
- When climb up and down the platform ladder, do not slide, jump, shake ladder, and prevent falling from height. **It is strictly prohibited that two or more persons climb up and down the ladder at the same time.**
- When electrical secondary operations, prevent to get an electric shock.

9.7- Attachment: Platform Composite Insulators Force Measuring Device Usage Instruction

Force measuring device consists of a spring dynamometer, the upper clips, the lower clip, rod, pin, nuts, etc., can be displayed directly measuring force, also has correction accuracy and adjust to zero functions. The device is excellently performance and easy using.

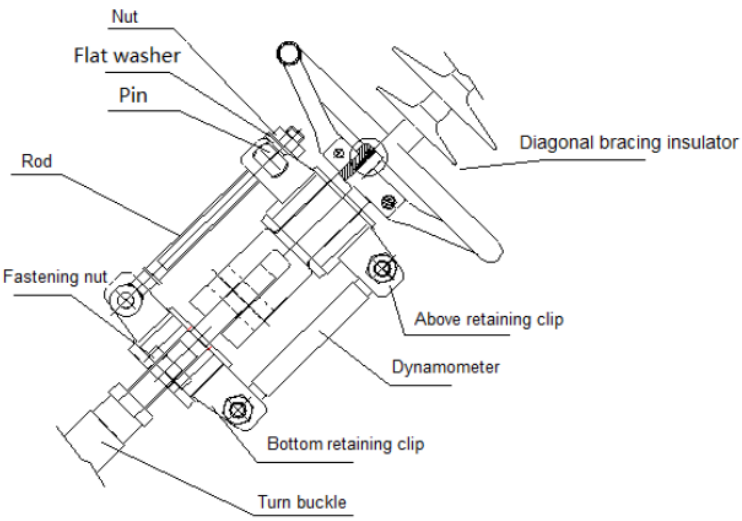

Fig.A-1 Force measuring device assembly drawing

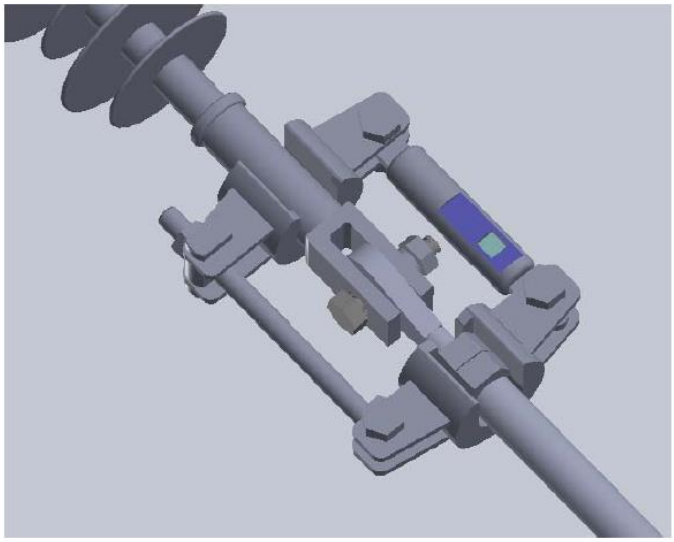

Fig.A-2 Force measuring device measuring force diagram

Measuring Method and Procedure

Step 1: Loose the Turn buckle to the loosest place.

Step 2: Install the above and bottom retaining clips to turn buckle, tightening nut and fastening composite insulators.
Step 3: Connect dynamometer and rod as fig. A-1.

Step 4: Tighten the nut on the rod, so that the reading on the meter reaches the required value.

Step 5: When dynamometer readings reaches the required value, the force on turn buckle and composite insulators connection is replaced by the measuring force device, the connection bolts loose.

Step 6: If the tension value reaches standards, turn buckle still fastened to composite insulator connection bolts. It indicates tension is over, then adjust turn buckle to loosen the connecting bolts.

Step 7: Remove the force measuring device. Tighten the turn buckle and nuts.

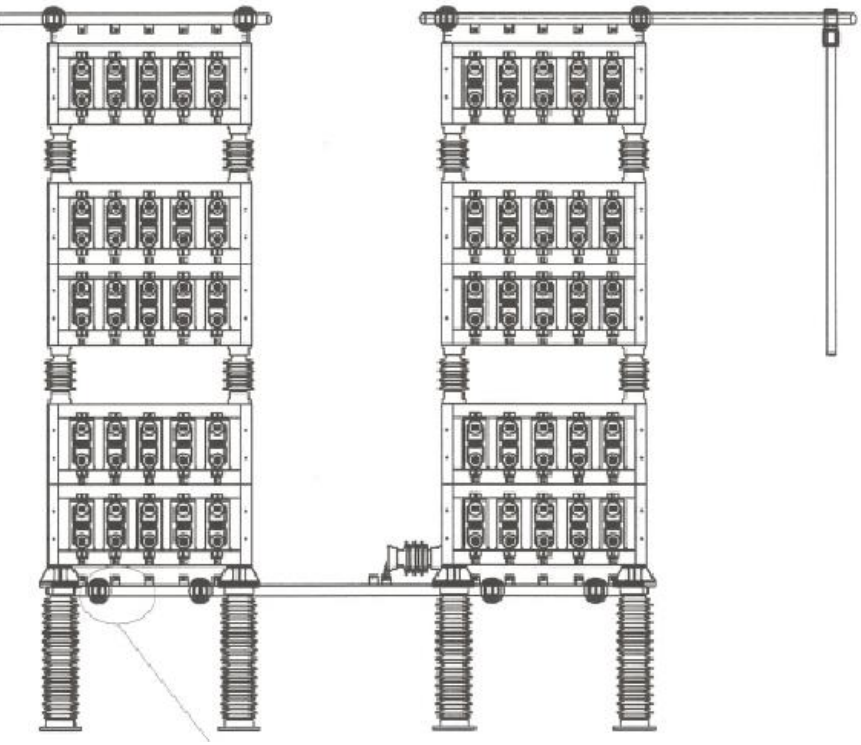

10- FSC CAPACITOR BANK MANUAL

10.1- Overview

10.1.1- Main Purposes and Aplicable Scope of the Product

These products connected in series to an AC power system with the frequency of 50Hz, at nominal voltage of 400kV, for improving the voltage quality of electric power system, increasing the system stability limit and transmission capacity, giving full play to the economic efficiency of power transmission and transformation equipment, so as to reduce the power loss.

10.1.2 Type

TCB400-396000/660AQW

10.1.3- Meaning of each letter in the type

- **T:** Complete set of capacitor banks
- **CB:** Series Compensation capacitor banks
- **400:** Nominal system voltage 400kV
- **396000/660:** The total rated capacity of the capacitors in the bank is 396000kvar, and a single capacitor has a rated capacity of 660kvar
- **A:** Single star connection
- **Q:** Bridge current differential protection
- **W:** Outdoor type

10.1.4- Application Environment

The capacitor bank is designed for ourdoor use in the area where the altitude shall not be greater than 2000m and the ambient air temperature of -40/45 centigrade. The environment where it is mounted shall be free any gas and steam that may cause severe corrosion to metals, or free of any violent vibration, explosive of flammable hazardous articles.

10.1.5- Environmental impact

The capacitors in the capacitor bank are oil immersed in the liquid medium of benzyl toluene which is free of polychlorinated biphenyls (PCB) and non-toxic.

10.1.6- Safety

Safety requirements of the capacitor bank mainly include the following points:

1-Electrical distance: electrical distance between each part in the capacitor bank satisfies the national stsndarts.

2-Corona discharge: according to the calculation of the space potential distribution of 400kV AC capacitors in parallel and the eletrical field distribution of key parts through Maxwell 3D electromagnetic simulation software, the maximum electrical field intensity amplitude of the capacitors is less than 2.0kV/mm, and the capacitor bank will not have corona discharge at the maximum continuous operating voltage.

3-Seismic performance: the finite element analysis software ANSYS is used for linear elastic calculation and analysis on the super high voltage capacitor bank structure. Calculation result shows that the strenght of capacitor bank benches and insulator members satisfies the notional standart code for <**Design of Seismic of Electrical Installations**> in the seismic safety, and the strenght of the structure fixed bolts satisfies the revelant standarts.

10.2- Safety Notive For Using

10.2.1- Safety method of use

Because the capacitor can store electrical energy, when the capacitor disconnects from the grid, the stored electric charges cannot be completely released in a short period of time, and charges in the capacitor tend to transfer to other articles. Before contacting any live parts of the capacitor with the body, it is also required to discharge electric by shortcut the two outlets of the capacitor with a metal wire, even if the capacitor has been powered off for a time long enough. Newer touch the two outlet terminals with hands at the same time, to avoid the impact of residual charges and causing unnecessary injury. The capacitor out of service shall be short-circuited and wired to the ground for a long term, to avoid the impact of residual charges in demolition and wiring.

10.2.2- Possible wrong ways to use or misoperations

10.2.2.1- Wrong ways to use:

Reclose before finding the reasons of the tripping protection action and handling correctly.

10.2.2.2- Misoperations:

Put the capacitor bank into operation again before the discharge time meets the requirements after bank switching off.

10.2.3- Possible damages caused by misuse or misoperations

The damaged capacitor will expand the accidents when it is put into operation again before being tested and verified free of failure. If the capacitor bank is put into operation again before the required discharge time after disconnection, the capacitors may be damaged due to overvoltage and incomplete discharge.

10.2.4- Emergency measures in case of abnormalities

In case of the following circumstances, the capacitor shall be immediately quitted, and the cause shall be investigated and ascertained in the good time:

1. Capacitor explosion occurs.
2. Serious heat at junctions or the temperature increases significantly detected by the infrared thermometer.
3. The capacitor bushing ruptures with flashover discharge.
4. Serious oil spouting or fire occurs to the capacitor.
5. The capacitor shell dilates seriously
6. There is abnormal sound in the internal capacitor.

10.2.5- Precaution during capacitor replacement

For disassembly of a single capacitor, special devices shall be used to prevent knocks and damages to the intact capacitor.

10.2.6- Other warnings

Insulating oil inside the capacitor unit is one kind irritating liquid to the cornea, so it shall be prevented from exposure to eyes; rinse it with clean water immediately once it gets into eyes accidentally; exposure to other parts of the body will not cause harm, but it is inedible.

10.3- Main Structures and Operating Principles

10.3.1- Main Structures

The capacitor bank is mainly composed of series capacitor units, post insulators, holders, tubular busbars, fittings and connecting wire etc.

The series capacitor bank of each phase is composed of four capacitor towers with 5 floors respectively, in which the four towers are bridge-connected through a tubular busbar. The capacitor bank of each phase has 200 CAM6.6-660-1W series capacitor units on the steel structure frame, with 10 units mounted on each layer of frame, arranged bilaterally. Each capacitor tower fixed on the supporting platform is 400kV series compensation capacitor bank supported by 4 insulators of 72.5kV, supported by 24kV insulators between layers.

10.3.2- Operating Principles

Each side of the single capacitor tower has a bridge arm, and the single capacitor bank of each phase are under H-shaped bridge differential protection, which is achieved by connecting the two arms with unbalanced current transformer at the neutral point.

The electrical connection is shown in below figure.

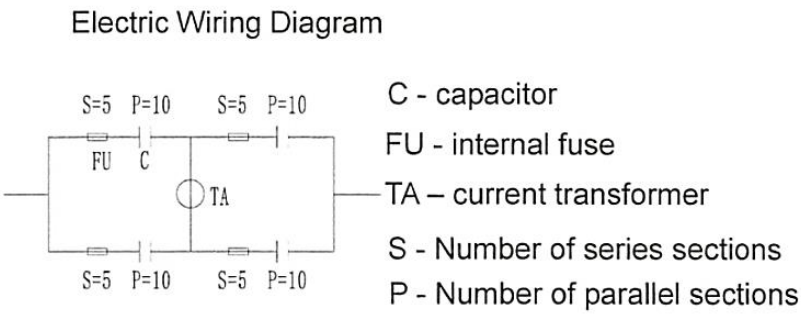

10.4- Technical Features

10.4.1- Main Technical Parameters

The system nominal voltage of the capacitor bank to connect to the system is 400kV, the total rated capacity of the capacitor bank is 396000kvar with rated capacity of each capacitor unit to be 660kvar;

The rated capacitance of each phase is 96.46μF, the ratio of the maximum to the minumum capacitance values of the banks between any two of the three phases shall not be greater than 1.005; the ratio of each phase capacitance to the rated capacitance shall not exceed 1.025; the ratio of the maximum to the minumum capacitance values between phase armsof the capacitor bank shall not exceed 1.0005; the ratio of each unit capacitance to the rated capacitance shall not exceed 1.02; the rated current is 2000A

10.4.2- Short-time overcurrent ability

Duration	Multiple of overcurrent (p.u.)
Long-term continuous operation	1.00
8 hours (at the 12-hour interval)	1.10
30 minutes (at the 6-hour interval)	1.40
10 minutes (within 2 hours)	1.50

10.5- Size and Weight of Capacitor Bank

10.5.1- Size

The single phase capacitor bank is **6420mm (L) x 6495mm(W) x 4925mm(H);** Length(**L**) x Width(**W**) x Height(**H**)

10.5.2- Weight

The total weight of the single phase capacitor bank is 2600kg=6500kgx4.

10.6- Installation and Commissioning

10.6.1- Pre-installation inspection

Read the installation instructions and general assembly drawings carefully before installation to have a detailed analysis of capacitor tower installation structure and an overall comprehesion of the technical requirements of the installation.

Attentions shall be paid to the label signs on the capacitor frame, insulators and the types of fittings during installation.

The parts are connected by bolts; after tightened, the exposed thread shall ve 1~5 pitches in length; the type and length of the bolt as well as the directions shall be in strict accordance with the general assembly drawing of filter capacitor devices (Note: except in special cases).

10.6.2- Installation process

Read the following flow chart cerefully before installation.

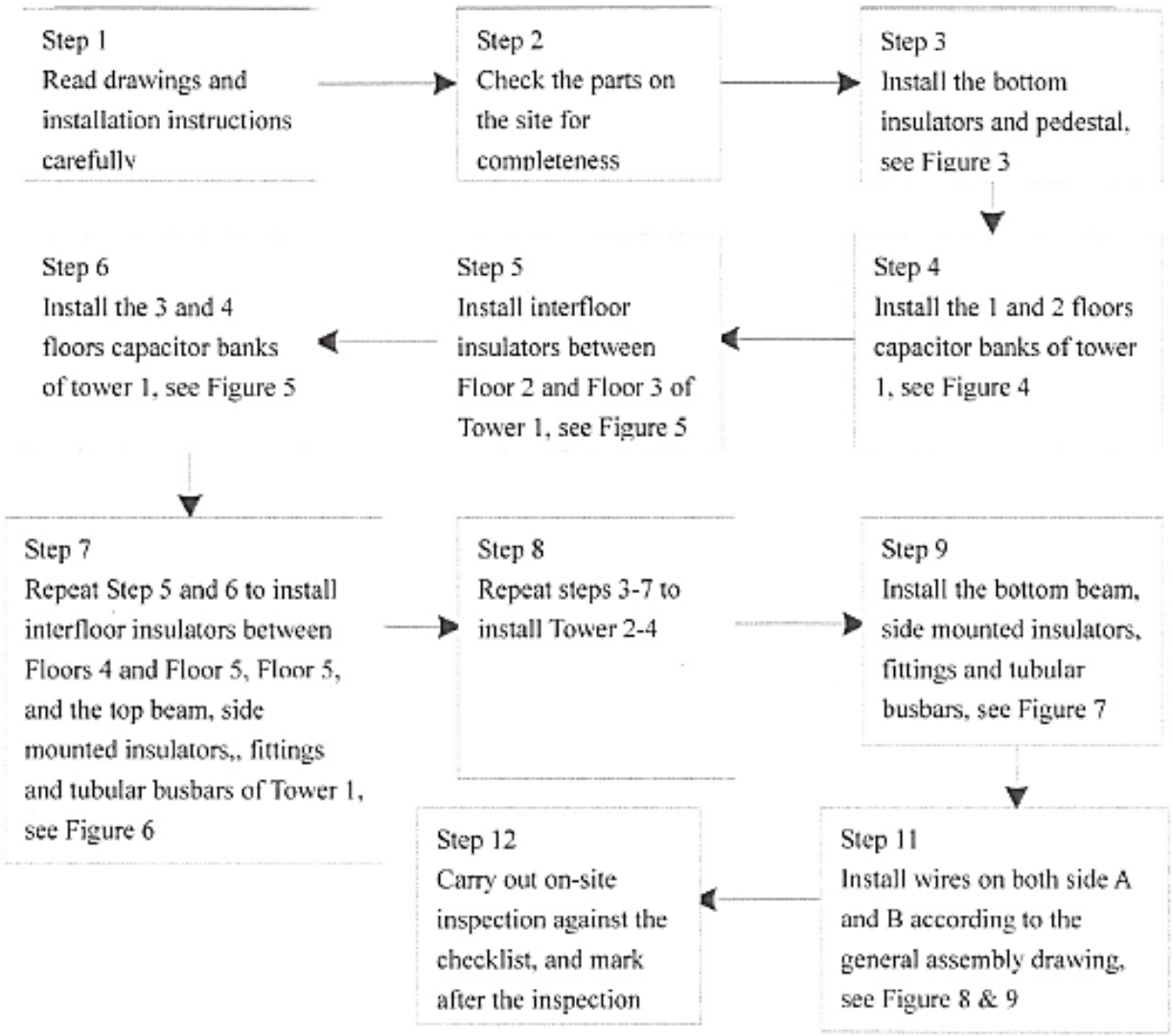

Figure 8: flow chart of installation

Figure-3:

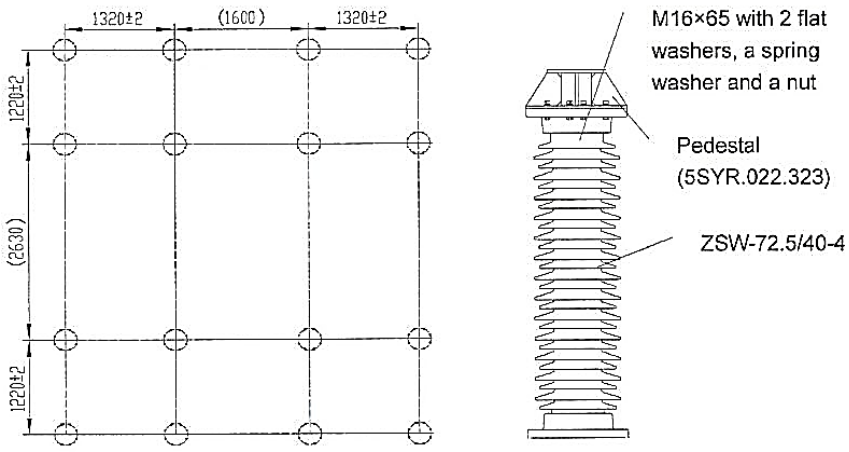

Figure-4:

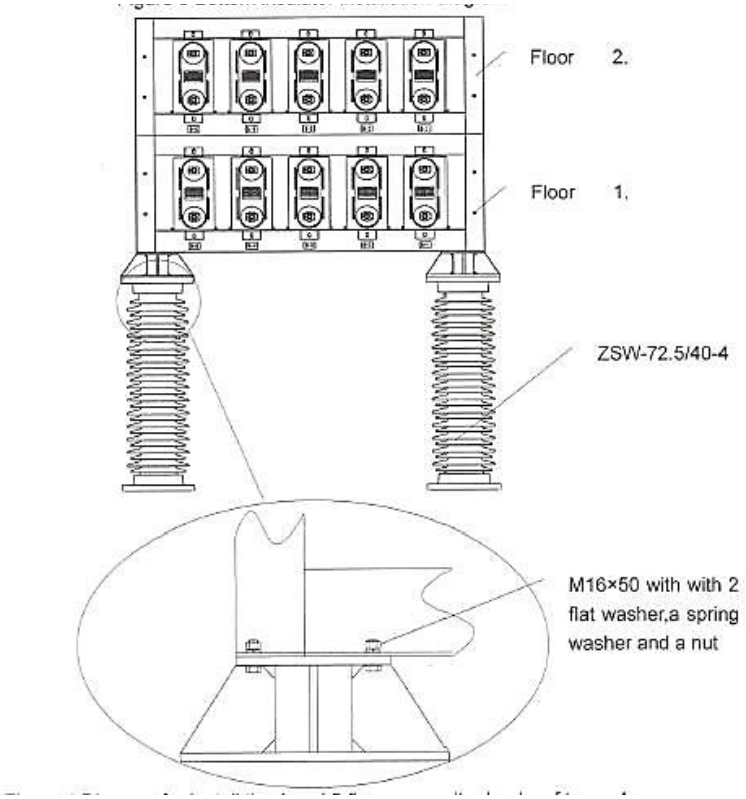

Figure-5:

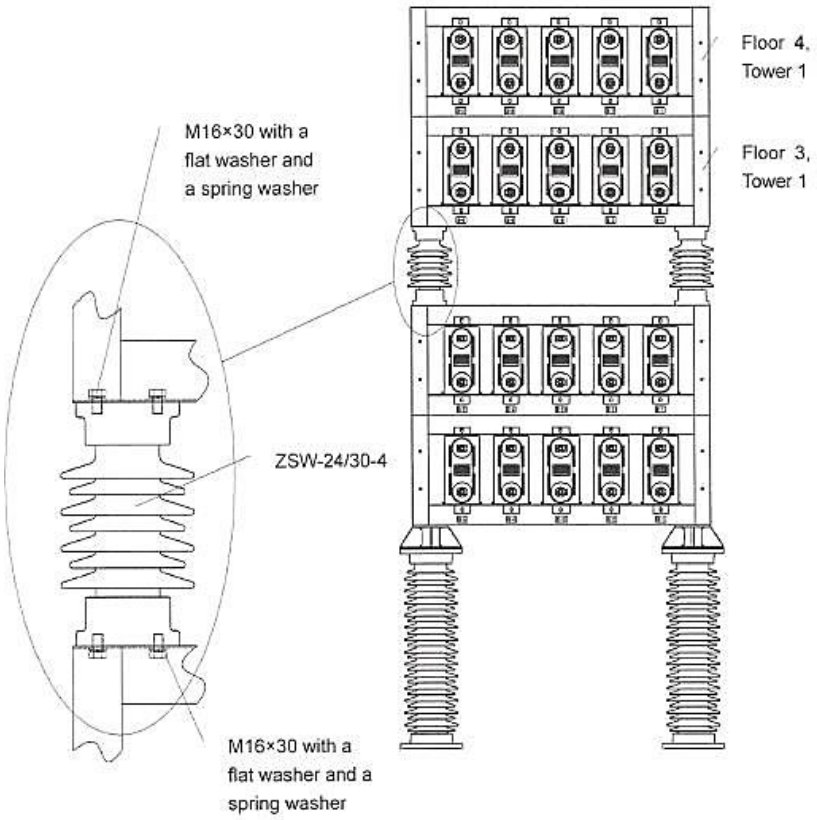

Figure-6:

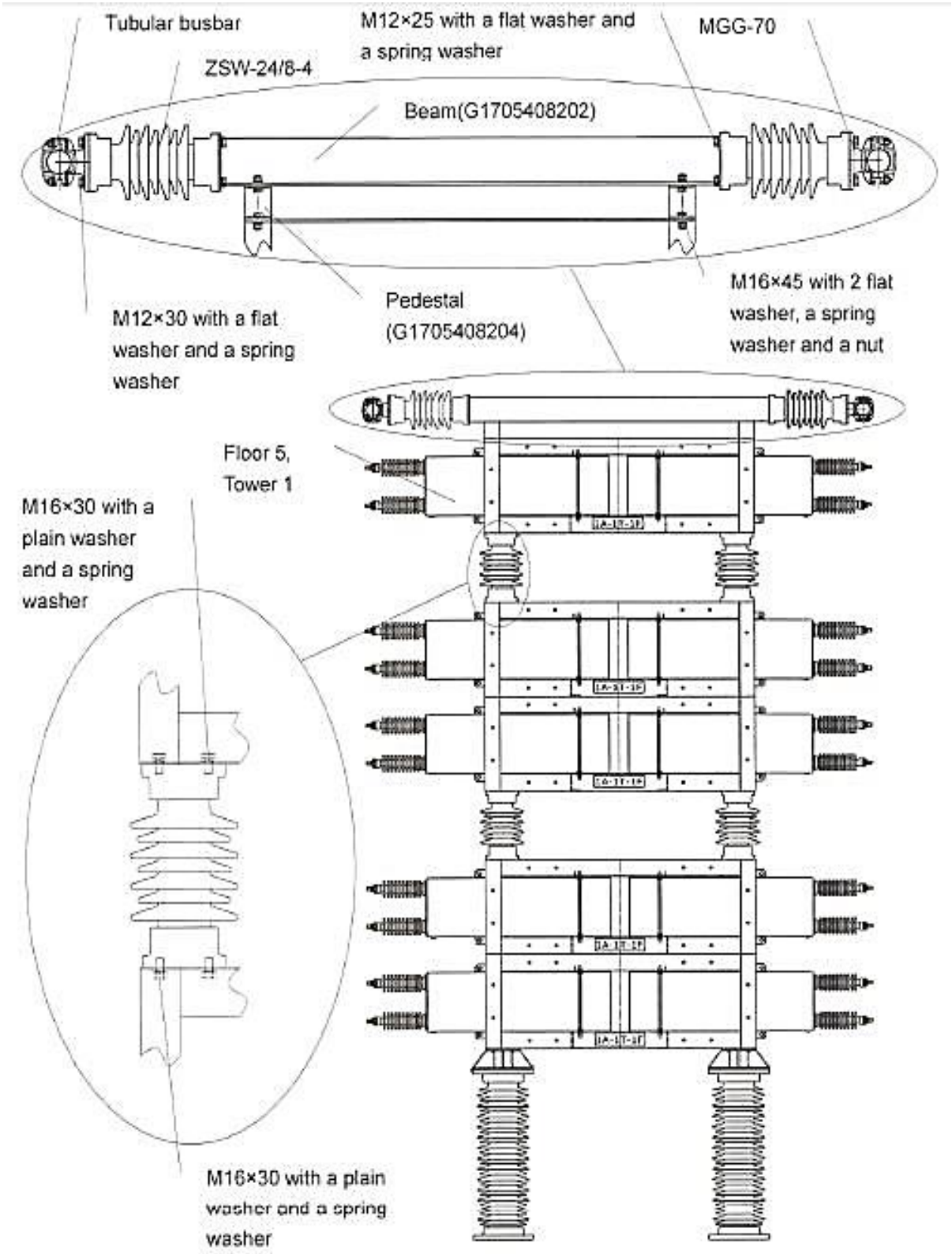
Tubular busbar
M12×25 with a flat washer and a spring washer
MGG-70
ZSW-24/8-4
Beam(G1705408202)
M16×45 with 2 flat washer, a spring washer and a nut
Pedestal (G1705408204)
M12×30 with a flat washer and a spring washer
Floor 5, Tower 1
M16×30 with a plain washer and a spring washer
M16×30 with a plain washer and a spring washer

Figure-7:

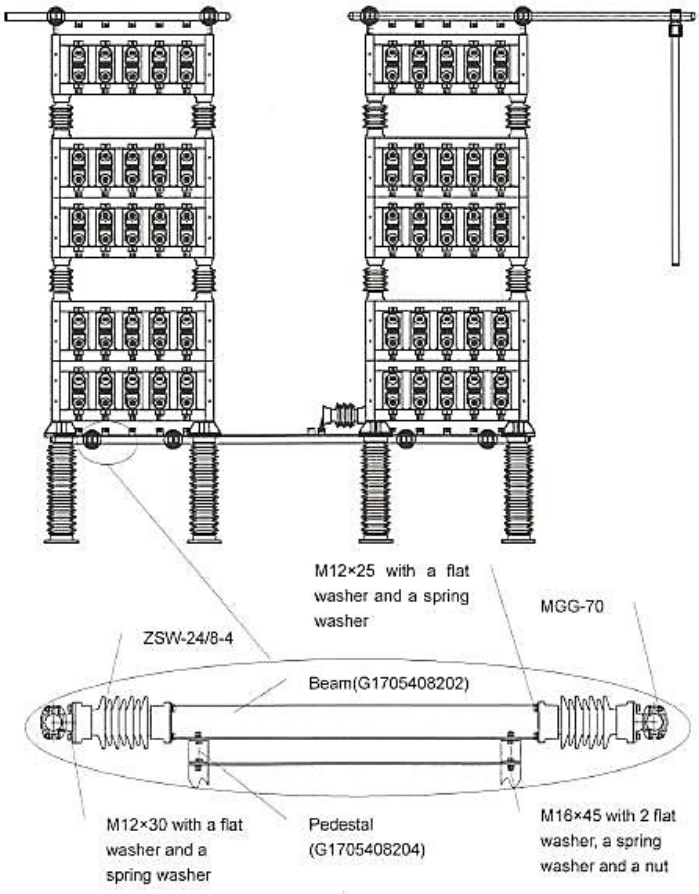

Figure-8:

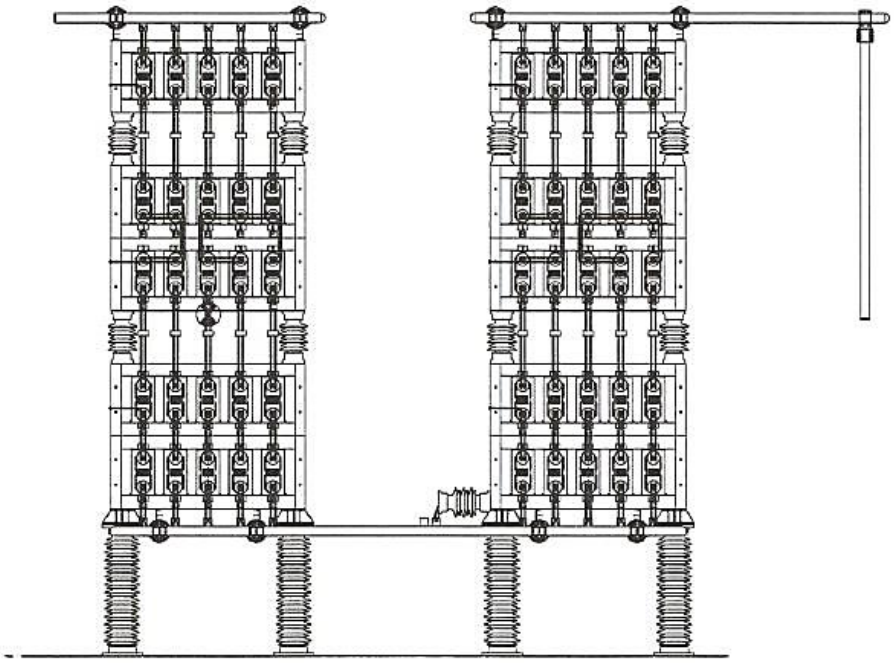

Figure-9:

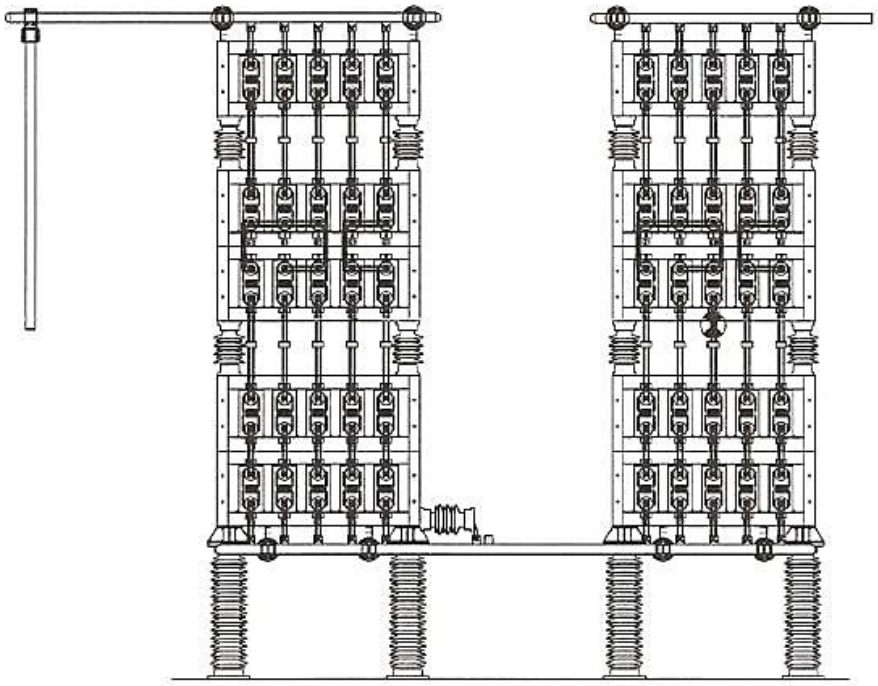

10.6.3- Installation Instructions and Precausions

10.6.3.1- Insulator porcelain groups shall uniformly face down.

10.6.3.2- All fasteners in the device shall be tightened with a torque wrench, and then marked in red.

10.6.3.3- It is strictly prohibited to tread or knock with exernal forces on all tubular busbars during installation.

10.6.3.4- Copper surfaces of the copper aluminum transition sheets are enameled with tin, marked with a Chinese character, which is copper, so they shall be distinguished while installing, and reverse installation is strictly prohibited.

10.6.3.5- When specific operation is performed, the capacitor bushing shall be prevented from exernel forces, and it is strictly prohibited to use the capacitor casing for capacitor carrying or stand on the casing for operation.

10.6.3.6- In the capacitor unit wiring operation at height, a short safety rope shall be tied to the tools to prevent them from falling and damaging capacitors.

10.6.3.7- When the wire clips decicated for capacitor bushing outlet terminals are tightened, a torque wrench must be used to support the solid wrench for operation on upper and lower fasteners respectvely. The torque shall be in strict accordance with the values specified by the manufacturer, and the torque vale must be checked before tightening, so as not to damage the casing as shown in Figure 10 and Figure 11. Upon reaching the tightening torque, red marks shall be made on tne capacitor terminals, as shown in figure 12. The recommended tightening torque value is 28~30N*m.

Figure-10:

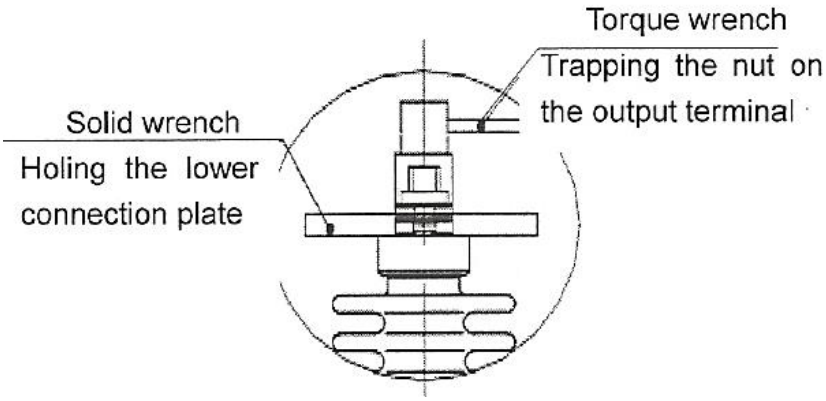

Figure-11:

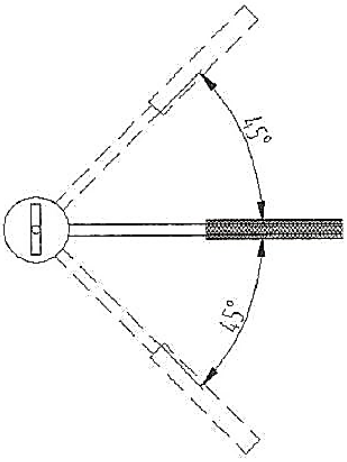

Figure-12:

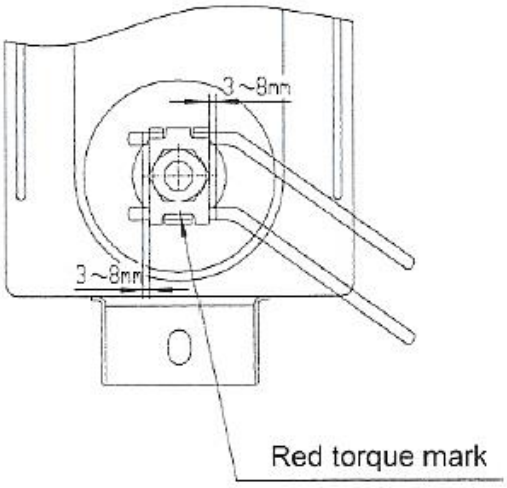

10.6.4- Balancing Table

Refer to Balancing Table G1705409601

10.6.5- Capacitor replacement procedure

When a capacitor unit in the capacitor bank needs to be replaced. first look up he capacitance specified on the nameplate of the capacitor unit to be replaced according to the capacitive position table, then check the factory test report af the spare capacitor units to find one that has the similar capacitance ta replace the one to be replaced.

10.6.6- Commissioning

Commissioning procedures, methods and precautions shall be accordance with the requirements of the acceptance unit.

10.7- Utilization and Operation

10.7.1- Pre-commissioning inspection

10.7.1.1- Visual inspection

The following visual inspections must be made before operation:

1. Remove debris both on the site and the base to confirm no installation tools or meterial left in the capacitor bank, the site shall be kept clean and tidy.
2. Confrm the mechanical parts of equipment are in intact.
3. Clean the surface of insulators and bushings to prevent pollution flashover.
4. Check insulators and bushings for fracture and capacitors for oil leakage.

10.7.1.2- Electrical connection inspection

The following electric connection inspections must be made before operation:

1. Confirm primary wiring is correct. Check whether the capacitor components are properly connected and in good contact. It can only be put into trial operation acer confirming to be correctly connected.
2. Ensure the net electrical distance between different potentials, and check whether the connection between isoelectric points is firm and reliable.

10.7.2- Inspection of trial operation

The following inspections must be made during trial operation:

1. Within 8h~24h after the capacitor bank is put into operation, recheck the three-phase current balance af the capacitor bank.
2. Monitor the temperature rise at electric connectors and the equipment surface with regular records.

10.7.3- Inspection after trial operation

The following inspections must be made after the trial operation:

1. Check whether there is any leakage to capacitors, the joint discolors, and the shell bulges and ruptures.
2. Check whether there are any oil stains on the ground.
3. Check the electrical connections for overheating.
4. Check whether there is a discharge.
5. Check whether the wire connection is loose and the wire is worn out. Read just the torque on the capacitor outlet terminals (the recommended torque value is 28~30N/m).

10.7.4- Monitoring and recording during operation

The following monitoring and recording must be conducted during operation:

1. The three phase current balance.
2. The temparature rise at electrical connectors and on the surface of the equipment.

10.8- Failure Analysis and Elimination

Once capscitor failure occurs, a record must be kept immediately (on voltage, capacitance, load and the capacitor capacitance, segal number, etc.). It shall not be reput into operation before pinpointing the cause and handling correctly. **Analysis and troubleshooting of common capacitor failures are shown in below table.**

Failures	Cause analysis	Elimination methods
Bushing rupture	Collision occurs due to carelessness during transportation and installation	Replace the capacitor
Shell paint damages	Scuff occurs due to carelessness during transportation and installation	Minor damages can be repaired independently
Breakdown occurs in acceptance tests	1. Damages occurs to products during transportation 2. The test voltage is too high or the test lasts too long 3. Wrong methods is adopted for voltage measurement	Replace the capacitor
Significant changes in capacitance	Component breakdown and (or) fuse failure	Replace the capacitor
Loss increase	Capacitor quality worsening	Replace the capacitor
Shell bulging abnormally	1. A partial discharge occurs within the product 2. Component breakdown or pole-to-shell breakdown	Replace the capacitor
Oil leakage	1. The flange is badly sealed due to lifting operation when carrying casings 2. The casing is damaged due to e xcessive force in screwing nut 3. The defect is caused in manufact uring process 4. The temperature changes fiercely	Replace the capacitor
Temperature rise	1. The ambient temperature gets too high and the capacitors are positioned too densely 2. The medium is aged with enhanced loss	1. Improve the ventilation conditions 2. Replace the capacitor

10.9- Protection

10.9.1- Internal Fuse Protection

The internal fuse is the first protection line for the internal fault of capacitor.

10.9.2- Bridge current differential protection of the capacitor bank

Bridge current differential protection is the second line for protection of the capacitor internal fault, at the first stage, the current setting value for **alarm** is **0.033A**; at the second stage, the current setting value for **delay tripping** (the maximum delay 30min) is **0.42A**; at the third stage, the current setting value for **immediate tripping** (the maximum delay 0.5s) is **0.53A** (current transformer ratio at 5/1A).

10.10- Maintenance and Repair

The Capacitor bank shall be maintained and repaired according to the following requirements after being put into use:

1. Observe the operation of the capacitor bank components, it is suggested that the observation shall be conducted at least once a day. Clean the surface of each casing and the shell, frame of each electric device so as to prevent any accident.
2. Condunct routine inspections after one week of trial operation; check whether there are any oil stains on the ground; and check the electrical connections for overheating.
3. Carry out routine inspection every three to six months, and tighten all electric connectors.
4. Conduct regular measurement of capacitance of an invidual capacitor in the bank, and have the measurement results compared with the previous records. When the capacitance decreases by more than 6%, it shall be carefully inspected and put out of service in case of any problems discovered. If a capacitor needs to be replaced due to damages, its rated voltage and capacity, dimensions shall be ensured to meet the revelant requirements, and meet the requirements of the capacitor balancing.

10.11- Transportation, Packaging and Storage

10.11.1- Capacitor banks are packed in the wooden cases with each case containing 4 layers of capacitor banks.

For the location of each capacitor layer please see the packing list outside the container; tubular busbars, fittings and post insulators are packed in 3 phase; beams, fasteners, flexible cords and other accessories are packed in a phase.

10.11.2- Packing List

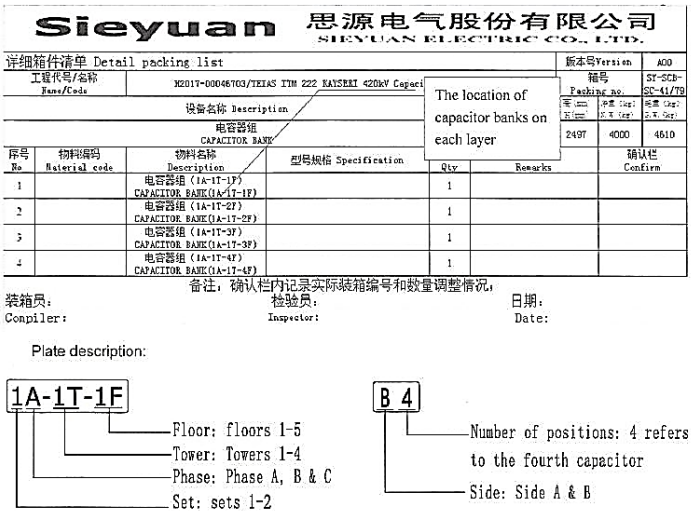

Sieyuan 思源电气股份有限公司
SIEYUAN ELECTRIC CO., LTD.

详细箱件清单 Detail packing list

工程代号/名称 Name/Code	M2017-000467C3/TEIAS ITM 222 KAYSERI 420kV Capaci	版本号Version	A09
设备名称 Description		箱号 Packing no.	SY-SCB-SC-41/T9
电容器组 CAPACITOR BANK		2497	4000	4610

The location of capacitor banks on each layer

序号 No	物料编码 Material code	物料名称 Description	型号规格 Specification	Qty	Remarks	确认栏 Confirm
1		电容器组 (1A-1T-1F) CAPACITOR BANK(1A-1T-1F)		1		
2		电容器组 (1A-1T-2F) CAPACITOR BANK(1A-1T-2F)		1		
3		电容器组 (1A-1T-3F) CAPACITOR BANK(1A-1T-3F)		1		
4		电容器组 (1A-1T-4F) CAPACITOR BANK(1A-1T-4F)		1		

备注：确认栏内记录实际装箱编号和数量调整情况。

装箱员: Conpiler: 检验员: Inspector: 日期: Date:

Plate description:

10.11.3- Documents

Installation instructions, the packing lists, product factort test raports, certificates and other technical documents are enclosed in the container.

10.11.4- Unloading

10.11.4.1- Unloading of capacitor banks

See Figure-13 for diagram of a single layer lifting, Figure-14 for lifting of two layers, Figure-15 for lifting of the whole packing case, Figure-16 for the forklift to access the container.

Figure-13:

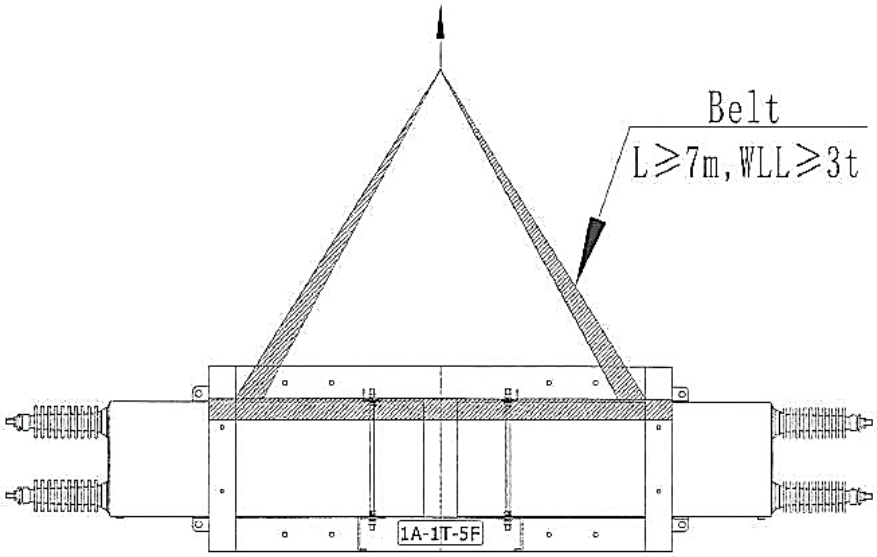

Figure-14:

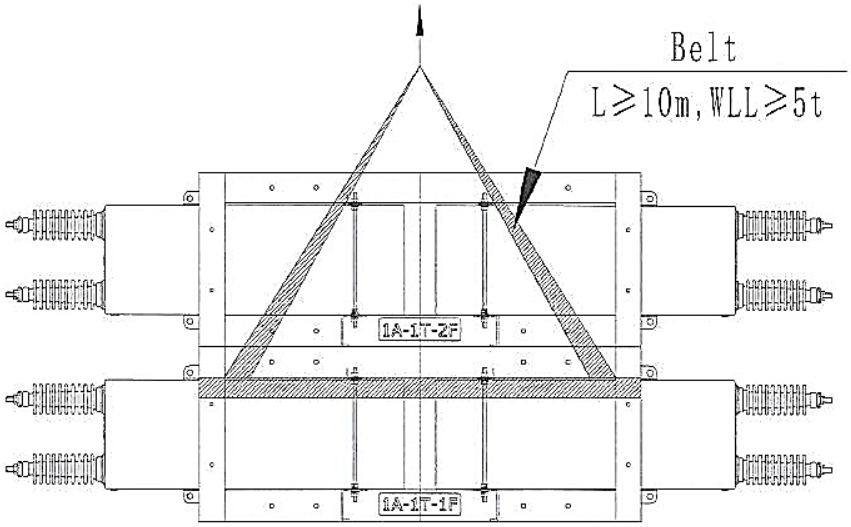

Figure-15:

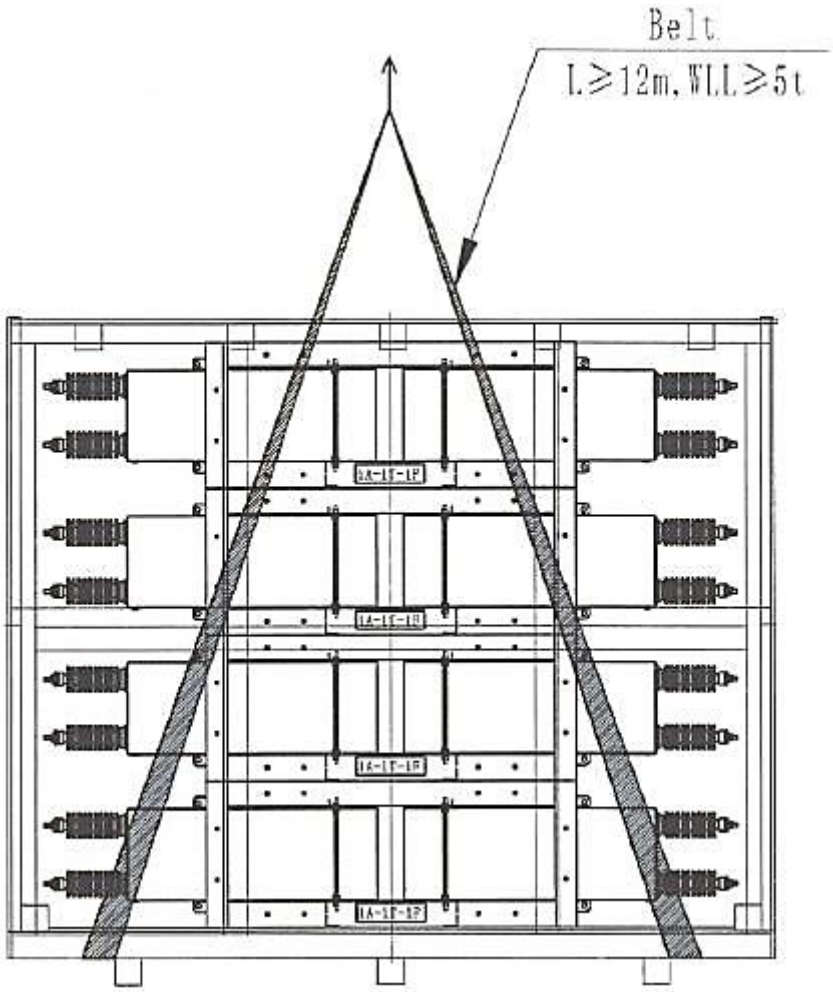

Figure-16:

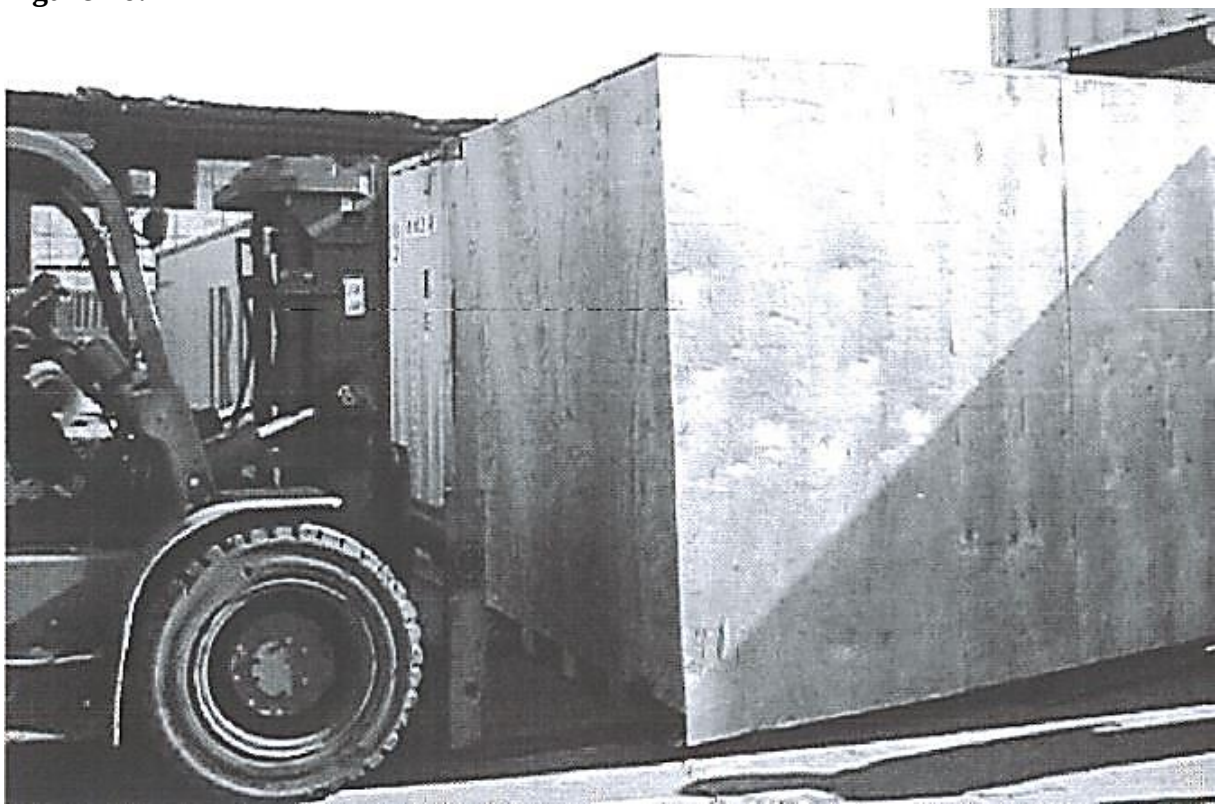

10.11.4.2- Forklift diagram to access the unit spare parts case, accessory case, insulator and tubular busbar packing cases

Direction for the forklift to access

Figure 17 Case of unit spare parts

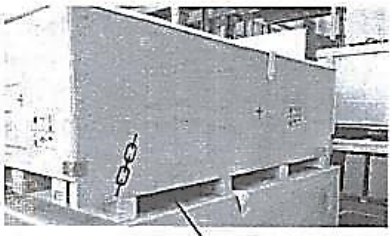

Direction for the forklift to access

Figure 18 Case of accessories

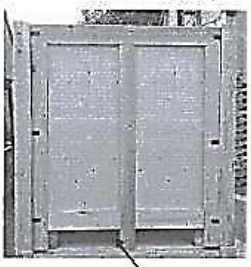

Direction for the forklift to access

Figure 19 Case of insulators

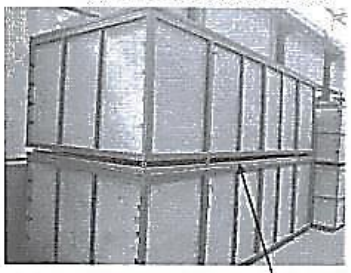

Direction for the forklift to access

Figure 20 Case of tubular basbars

10.11.5- it is not allowed to invert or roll over he packing cases in transportation and storage. While handling a single capacitor, it shall be kept tn an upright position, that is, to keep the casing upwards, is strictly prohibited to carry the capacitor by holding the casing.

10.11.6- Spare parts and tools of the capacitor bank shall be kept indoor from rain and snow. They shall be kept from fire, and there shall be no corrosive gas indoor. For storing a single capacitor, its casing shall be kept verticalty upward, it is not allowed to overlay another one on it without any support.

10.12- Unpacking and Inspection

10.12.1- Unpacking

The unpacking shall be jointly conducted by the representatives from the supplier (Contractor), construction management units (owners), contruction units, supervision units and operating units, to test the integrity of the equipment and data and make proper records on the unpacking inspection. In the end, it is required that all the representatives sign on the unpacking record.

10.12.2- Unpacking inspection

10.12.2.1- Conduct visual inspection to see whether there are defects or damages occurs to the products during transportation.

10.12.2.2- Check whether the delivered goods is consistent with the scope of supply and the attached packing list.

10.12.2.3- Accept according to the technical requirements of all accessories

10.13- Environmental protection and others

The film, paper and oil (**non-toxic, free of PCB**) as well as other biodegradable, metal and electic porcelain materials used in products will cause no pollution to the environment in the production, use and waste disposal. Scrapped capacitors must be recovered and processed by a qualifield unit.

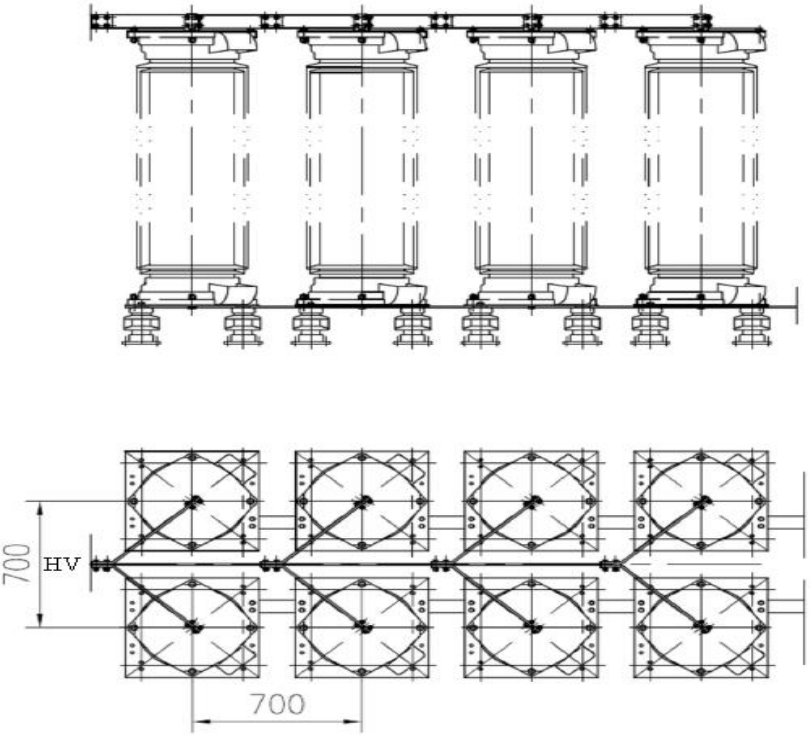

11- FSC METAL OXIDE VARISTOR (MOV) MANUAL

11.1- MOV Usage

Y4CR-115/3206 type **M**etal **O**xide **V**aristor (**MOV**) is applied to the series compensation device and installed in parallel at both ends of the series capacitor banks. As the primary protection device, the **MOV limits the over-voltage of series capacitors** directly **within the design scope with advantage of their excellent nonlinear voltage characteristics.**

11.2- Environmental Operating Conditions

- The ambient temperature should neither be higher than +40°C, nor less than -40°C, and the daily temperature difference should be within 25°C;
- The altitude less than 1000m;
- The power frequency between 48Hz and 62 Hz;
- The long-term power frequency voltage applied to the MOV terminals should not exceed the continuous operating voltage of the MOV;
- Seismic intensity under 7 degrees;
- Pollution grade d;
- Seat-type installation.

11.3- Model (Tip) Tanımı

The English letters and numbers of the MOV represent meanings shown as below:

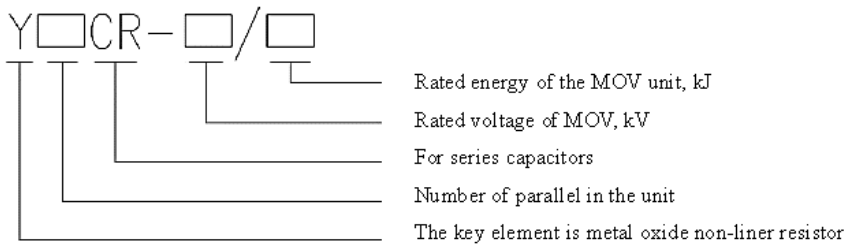

Figure 1: MOV Type

11.4- MOV Unit Structure

Y4CR-type MOV adopts porcelain bushing as external insulation, and the internal core consists of four nonlinear resistors in parallel.

The flange of the porcelain bushing is set with explosion-proof membrane in two ends and a mouth spray arc in the same side. When enormous pressure generated in internal MOV by some reason, high-pressure gas will firstly burst open the explosion-proof membrane, and then spray from the nozzle arc.

Note: The whole process of hanging the MOV unit from the box to the required installation location, any touches to the explosion-proof membrane should be prohibited to ensure its intact situation.

11.5- Installation

The MOV has a backplane with a thickness of 2mm at the bottom to protect the explosion-proof membrane during transportation. Please remove this backplane before formal installation. The MOV should be installed on the platform with accompanying hot dip galvanized mounting plate (thicker than 8mm) at the bottom.

This MOV unit is applicable to multiple parallel installations. When installed, the manner in Figure 2 is recommended and the MOV spacing should be not less than that shown in Figure 2.

Note: Despite the MOV unit allows parallel installation, it has provided mounting group requirements when leaving factory. Parallel use is allowed in same groups and prohibited in different groups. When some individual limiter needs to be replaced to other groups for parallel use, please ask our engineers for advice firstly.

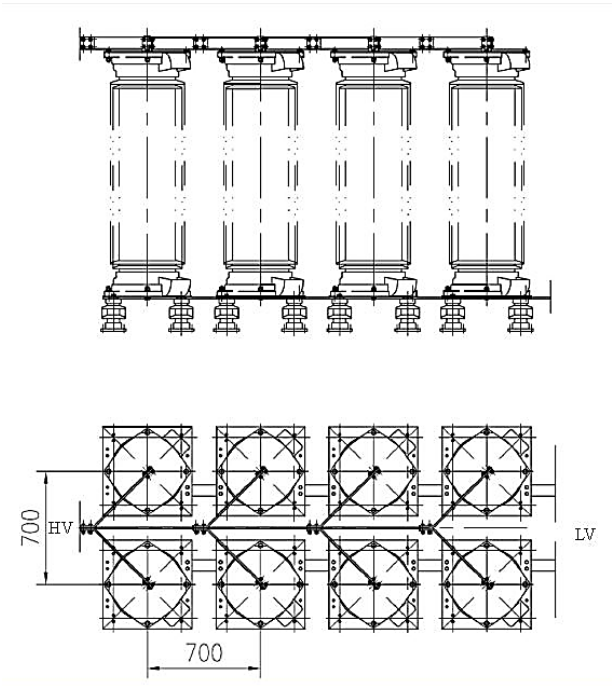

Figure 2: MOV installation diagram

11.6- Installation of MOV

Please check the mounting group before installation, then test the electrical parameters of the limiter as required (**such as insulation resistance, DC reference voltage and the leakage current under 0.75 times DC reference voltage**), and compare them with testing data when leaving factory.

Please contact our engineers in time when there are disagreements.

The installation can be performed according to the following steps:

a) Firstly, fix the mounting plate and the bottom post insulator (4) on the series compensation platform according to the platform layout.

b) Remove the two diagonal M16 bolts at the upper ends and insert two longer ones instead without taking the nuts, see in Figure 3

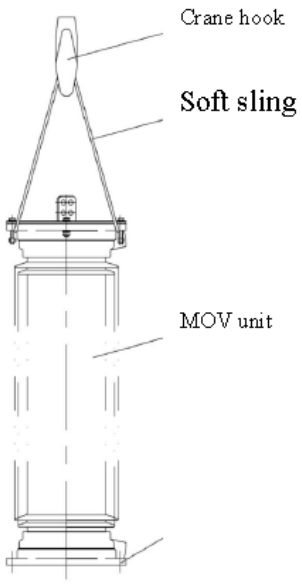

Figure 3: MOV lifting installation diagram

c) Fix the soft sling between bolt and upper flange, and slowly lift the MOV with crane. Then place it on the mounting plate (thin plate has been removed) and fix it in the backplane with four M16 bolts, nuts and washers provided with the MOV.

d) After all the lifting installation, connect the high voltage bus and low-voltage bus.

The bolt tightening torques in lifting process shown in Table 1

Size	M12	M16
Tightening torque(N.m)	45	110

Table 1: Reference value of bolt tightening torques

Note: The porcelain bushing of MOV is fragile. It is recommended to transport by lifting and taking appropriate measures to prevent collision and damage. Climbing or stampeding is prohibited to ensure the safety of people and equipment.

11.7- Configuration and Installation dimensions

The configuration and relative dimensions seen in Figure 4.

Note: the height H of MOV is different for different projects, taking the real product as prevail.

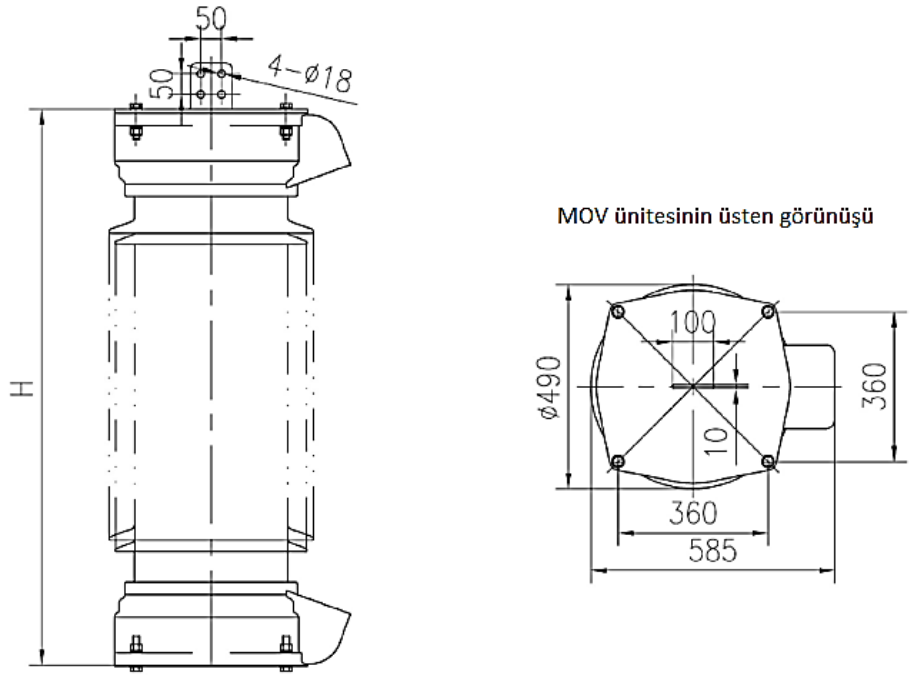

Figure 4: Configuration of MOV

11.8- Inspection and Maintenance

When the MOV is under normal operation, please take inspection and maintenance regularly to ensure safe operation of power system and find hidden dangers as early as possible.

The inspection includes:

- visual inspection,
- the insulation resistance test,
- the test of the DC reference voltage,
- the test of leakage current under 0.75 times DC reference voltage.
- Please record and compare with the factory test data.

Recommendation of inspection and maintenance seen in **Table 2**

Items	Periods	Criteria	Equipment state
Configuration	1 /quarter	No disorder	Operating, compensation outage, inspection
Busing cleaning*	1 /year	Keeping clean	compensation outage, inspection
insulation resistance	In the first 3 years:1/year 3 years later: 1/3years 15 years later: 1/year	≮2000MΩ	compensation outage, inspection
DC reference voltage		0.5~1.3times of factory test data	compensation outage, inspection
leakage current under 0.75 times DC reference voltage			compensation outage, inspection

Table 2: Items and periods of inspection and maintenance

Note: if the MOV porcelain bushing surface is PRTV coated, it should be checked annually to ensure the PRTV is not shedding, or it should be recoated. If bushing surface is not PRTV coated, it should be cleaned regularly to avoid contamination.

11.9- Acceptance and Preservation

When the product arrives, please check the package first. Then remove the package to confirm shipping list and accessories and check the configuration to ensure no damage or collision. In case of damage, please contact us in time.

Before installation, please keep the package on and save in storehouse at ambient temperature of -20°C to +30° C with no acid, alkali or other harmful components.

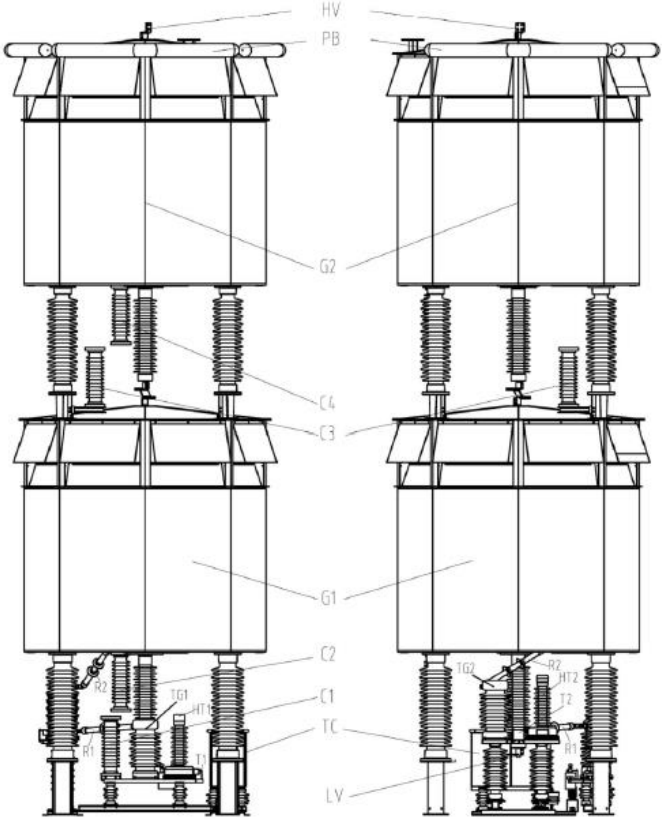

12- FSC SPARK GAP MANUAL

12.1- Spark GAP Usage

Type **KCX280/60** Spark GAP (system) is a key component of the series compensation, using for timely protection for power temporary over-voltage of series capacitor banks and the overload of MOVs.

12.2- Environmental Operating Conditions

- The ambient temperature should neither be higher than +40°C, nor less than -40°C, and the daily temperature difference should be within 25°C;
- The altitude above sea level less than 1000m;
- The Maximum relative humidity less than 95%;
- The power frequency between 48Hz and 62 Hz;
- Seismic intensity under 7 degrees;
- the maximum wind speed less than 35m/s;
- Pollution grade III;

12.3- Model (Type) Description

12.3.1- Type description of GAP System:

- **Type of gap system:** KCX280/60;
- **The first and second letter:** KC means the system is a control triggering one (i.e., forced triggering one);
- **The third letter:** X means “Spark GAP”;
- **Number before slash:** 280 shows the insulation level of gap system (kVrms);
- **Number after slash:** 60 shows the fault current carrying capacity of gap system (kArms).

12.3.2- Type description of Main GAP (G1 and G2):

- **Type of main gap:** ZCX140/60;
- **The first and second letter:** ZC means the system is a self triggering one;
- **The third letter:** X means “spark gap”;
- **Number before slash:** 140 shows the insulation level of gap system (kVrms);
- **Number after slash:** 60 shows the fault current carrying capacity of gap system (kArms).

12.3.3- Type description of trigatron (Sealing GAP)

- **Type of Trigatron:** KCMX80/0.1;
- **The first and second letter:** KC means the system is a control triggering one;
- **The third and fourth letter: MX** means “sealing gap”;
- **Number before slash:** 80 shows the insulation level of gap system (kVrms);
- **Number after slash:** 0.1 shows the current carrying capacity of gap system (kArms).

12.4- Structure and Working Principle of Spark GAP

12.4.1- Structure:

The structure of Type KCX280/60 spark gap system is shown in **Figure 1**

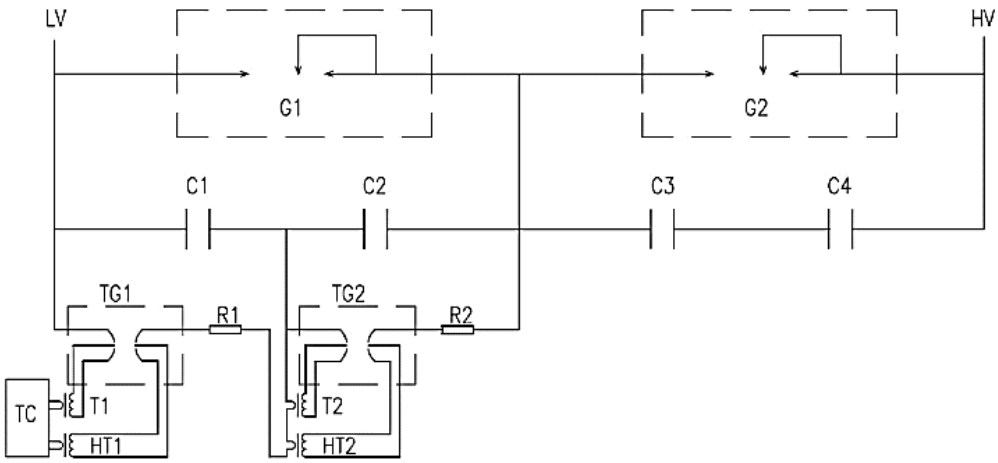

Figure 1: KCX280/60-type spark gap system structure

The system is composed by:

1. 2 self-discharge main gap, G1 and G2;
2. 2 triggered-discharge sealing gap, TG1 and TG2;
3. 2 current limiting resistors, R1 and R2;
4. 2 pulse transformers, T1 and T2;
5. 2 high insulation transformers, HT1 and HT2;
6. 4 grading capacitors, C1, C2, C3 and C4;
7. 1 trigger control cabinet, TC。

12.4.2- Working principle of Spark GAP System:

Seen in Figure 1. When the series compensation devices are on normal operation, the two serially connected main gaps (G1, G2) bear half of rated voltage of the capacitor group. When the ground line fault occurs, assuming the capacitor voltage rises up to 2.3pu, the two main gaps (G1 and G2) will bear voltage of 1.15pu before action due to the voltage limiter.

The main gap is composed of **flashover gap** and **continuous flow gap** internally

The flashover gap is the initial discharge gap with a distance of not less than 1.265pu (equivalent to 0.5 1.1 2.3pu) due to its own discharge voltage, to ensure no discharge at the maximum possible over voltage without triggering.

When the transmission ground line fault occurs, the MOV will limit the capacitor overvoltage to 2.3pu. Before receiving the trigger command, the two series connected main gaps will each bear 1.15pu.

When gap trigger control system receives the trigger command, it will send ignition pulse to the primary winding of pulse transformer T1 and HT1 at the same time, leaving seal gap TG1 spark at the high and low pressure side of the two electrodes, which will quickly breakdown the TG1.

After that, **the grading capacitor C1** will discharge through the primary winding of pulse transformer T2 and HT2 and a current-limiting resistor R1. The high voltage pulse generated by the second winding of pulse transformer T2 and HT2 makes the seal gap TG2 spark in high and low pressure side of the two electrodes, which will further quickly breakdown the seal gap TG2 breakdown and make **the grading capacitor C2** discharge through a current-limiting resistor R2.

When the voltage of grading capacitor C1 and C2 decreases rapidly, the voltage of main gap G2 will rise rapidly to an extent of self-discharge and breakdown with the main gap G1 voltage rising rapidly to selfdischarge and breakdown at the same time.

So far, two serially connected main gap all finish discharging so that the series compensation capacitor group by the damping device is bypassed.

12.4.3- Appearance:

The appearance of KCX280/60-type spark gap can be seen in Fig.2. The two main gaps are connected serially on top of another with the grading capacitor below the shell of each main gap.

Other components, such as seal gap, pulse transformer, limiting resistor and trigger controller are set under the shell of main gap G1.

The casing low voltage terminal of main gap G1 is connected with low-voltage bus of series compensation device. The top leading-out terminal of main gap G2 is connected with the high voltage wire. There is shielding device (PB) on top of the gap to avoid For avoiding generation of corona discharge.

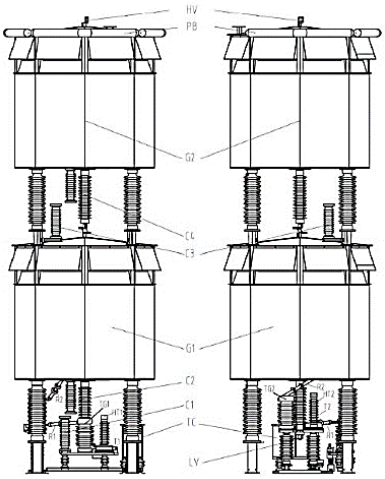

Figure 2: Appearance of Spark GAP

12.4.4- Inner structure and working principle of main gap

The inner structure of main gap can be seen in **Figure 3**. The gap shell (aluminum alloy) is supported by insulators and leading out the voltage by bushing.

The main gap electrode system is installed in the gap shell (WK) , and the gap system is composed by transverse flashover gap (SL-G) and vertical following current gap (XL-G), while the latter one has higher self-discharge level than the first one.

Electrically, the two gaps are parallel connected. Therefore, when over voltage happens at the ends of the gap, the self-discharge process starts from the flashover gap. As a result of the special structure of flashover gap, the electric arc will rapidly move upward to from the flashover gap to the following currentgap and keep burning under the mutual effect of electric and thermal power, until the gap is bypassed.

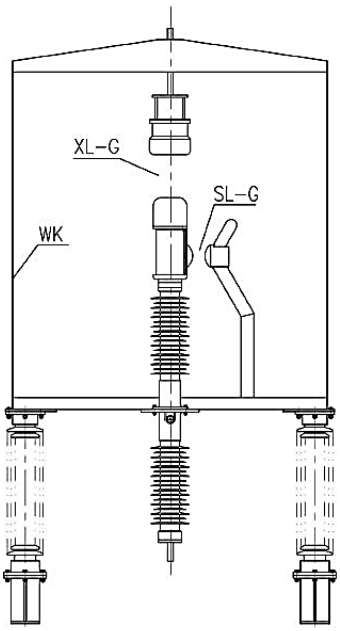

Figure 3: Inner structure of main gap

This working principle can effectively protect the geometry invariant of the two electrode surfaces of the flashover gap and the electrode won't be freewheeling ablation, thereby maintaining the flashover gap discharge voltage constant, as well as the spark gap can meet the discharge requirements for many times.

12.4.5- Working principle of sealing gap (Trigatron):

Suppose that the gap system bear a 2.3pu power frequency over voltage. The **sealing gap** will bear a power frequency over voltage of approximately **2.3pu/4=0.575pu** due to the specific value of grading capacitor.

By adjusting the distance between the two electrodes, the self-discharge voltage of sealing gap is to set above 10% higher of its withstanding power frequency over voltage, i.e. the self-discharge voltage is above 0.63pu; therefore, the sealing gap won't discharge under its power frequency over-voltage.

Since the two ends of sealing gap are set trigger pulse system, the surface will spark when the high voltage is suddenly applied to the electrode through the trigger pulse system, in this way the spark will urge the sealing gap discharge immediately

12.5- Installation of Spark GAP

Due to the large volume and can't be put upside down, the spark gap system can only be disassembled into parts, packaged and transported. It can be assembled only when transported to the construction site.

Lifting devices are needed in the loading, unloading and handling process.

12.5.1- Assembling of main gap:

The assembling of main gap should be performed on the ground, taking G2 for example as below:

1) Assembling of components

Including all the electrode parts (following current gap electrode assembly, and side electrode assembly), insulator assembly, and capacitor support assembly.

All the electrode parts should be installed by professional field engineers of the supplier and other parts can be finished under the instruction of the engineers.

2) Installation of shielding parts and wiring board

The shielding part, vertical wiring board and pipe bus insulator of G2 should be mounted on the corresponding position.

3) Gap shell and assembling of support insulators

Seen in Figure 4. Hoisting the gap shell and install support insulators under the four feet of the shell.

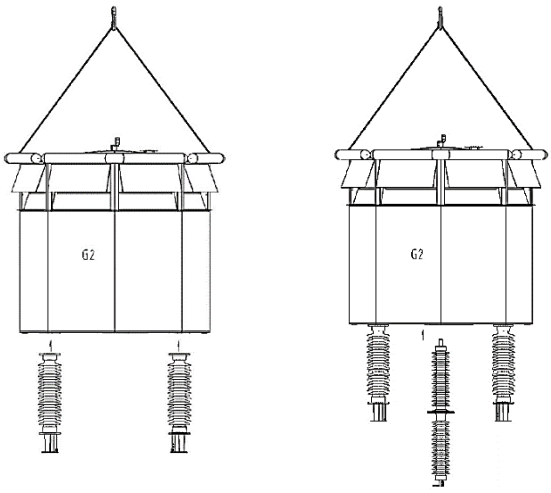

Figure 4: Installation graph of post insulators and bushings

4) Installation of wall-bushing:

Seen in above Figure 4.

When lifting the shell, insert the wall bushing (installing vertical wiring board at the bottom) into the shell from bottom with bolt, and then put it on a flat surface, fastening with bolt with a wrench torque of 100N.m.

5) Installation of grading capacitor under the main gap:

Seen in Figure 5, install the grading capacitor at the required position under the main gap.

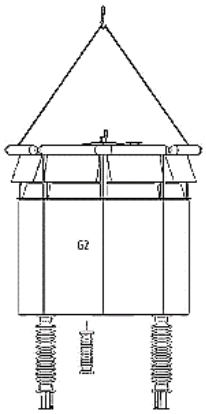

Figure 5: Installation of grading capacitor

6) Installation of all the electrode assembly:

The installation is carrying on inside of the shell, including upper electrode assembly, a lower electrode assembly, a side electrode assembly. The work should be completed by the field engineers of the supplier.

12.5.2- Assembling of Spark GAP System

The gap system assembly is performed on the series compensation platform after the assembly of main gap.

The assembly process is shown as below:

1) Install the gap base on the series Compensation platform.

2) Seen in **Figure 6**, lift the main gap onto the platform and tighten bolts to see if all components are well fastened. If not, please adjust the bolt by connecting hole.

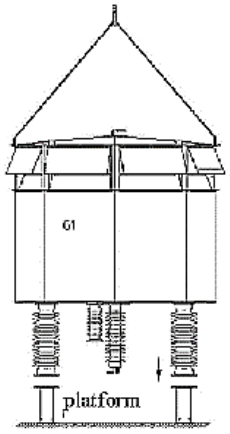

Figure 6: lifting graph of G1

3) Lift the main gap G2 as shown **in Figure 7**, and put it on the four installing holes of G1 and fasten the bolts.

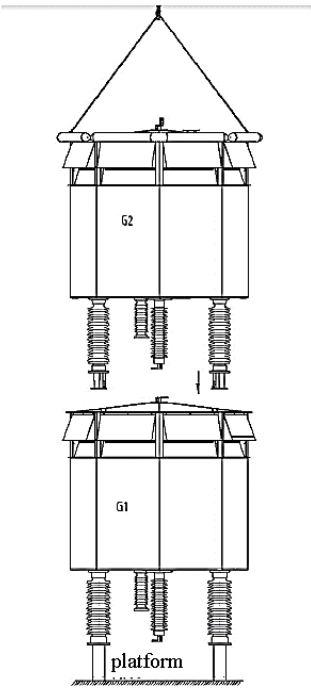

Figure 7: Lifting graph of G2

4) Mount the capacitor support assembly on the insulator base of main gap G2. Seen in **Figure 8**

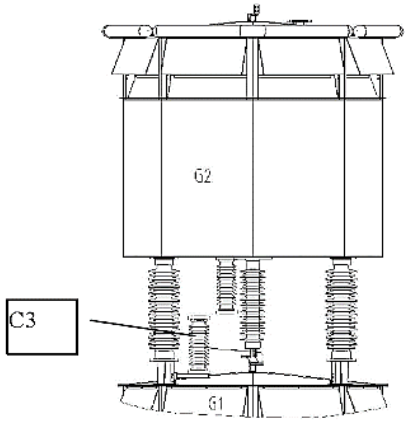

Figure 8: Installation of C3

5) Install the base of low electric potential trigger system foothold (LTF,which should be closely connected with the platform steel separator), and install high electric potential trigger system foothold(HTF) and trigger control cabinet foothold(TCF) in corresponding position, seen in **Figure 9**.

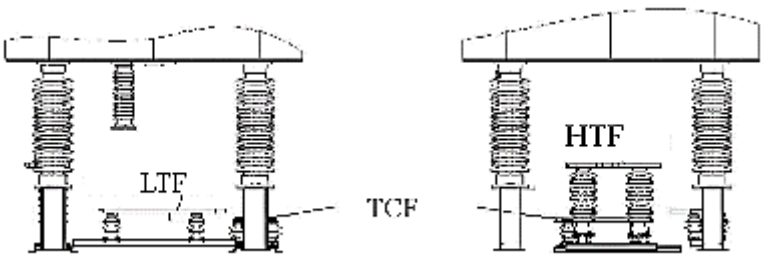

Figure 9: Installation of LTF and HTF

6) Seen in Figure 2, install the components of trigger system. Install the sealing gaps, pulse transformers of high trigger system, and then the trigger control cabinet, grading transformers, low voltage shunt capacitor, current-limiting resistors and other equipment in turn

7) The field engineers of suppliers will perform the internal wiring of gap system (including G1 and G2 wiring, wirings of gap trigger system)

The wrench torque referred in the spark system assembly can be found in **Table 1**.

Dimension of bolts	M10	M12	M16
Wrench torque(N.m)	20	45	110

Table 1: Wrench torque reference value

12.5.3- Adjustment of gap distance

The sealing gap has been adjusted according to the requirements of power frequency discharge voltage when leaving factory. If you have any problem, please contact us as soon as possible.

There are two gaps inside the main gap (seen in Figure 3), one is flashover gap and the other is a following current gap, which allows deviation of ± 10mm; while the flashover gap distance allows ±0.5mm.

The adjustment of gap system is carried out after the assembly of main gap. Different series compensation projects always have same distance setting value of following current gap. However, the distance setting values for flashover gap are inconsistent. The flashover gap distance is determined by the **power frequency discharge voltage calibration curve** according to the geographical position the series compensation located and the climatic conditions (mainly temperature, pressure)

12.5.4- Wiring of control cabinet

The front and back structure of control cabinet can be seen in Figure 10 and 11. The incoming lines of control cabinet include:

- **four couples from two current transformers for power;**
- **two groups of optical fiber from two fiber columns;**
- **one couple of incoming lines from low voltage shunt capacitor.**

They go into the control cabinet through the bottom, among which the four couples incoming lines occupy four holes and connected with corresponding terminals from the bottom; each group (usually 3 lines) occupy one hole and connected with the optical fiber socket from the back of the control cabinet; the one couple of shunt capacitor is connected to the required position at the front box through a waterproof connector.

The outgoing lines of control cabinet include: two couples of outgoing cables going to the two pulse transformers. The two cables are connected to the pulse transformer through two waterproof connectors at the bottom.

The wiring of one couple incoming lines and two couples of outgoing lines of shunt capacitor should be performed by field engineers of suppliers.

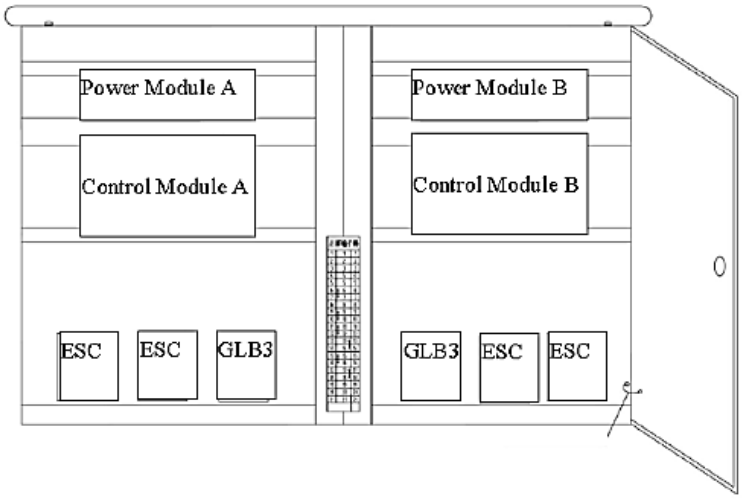

Figure 10: Front structure of control box

In the Figure 10, the ESC means energy storage capacitor; the GLB means isolation transformer.

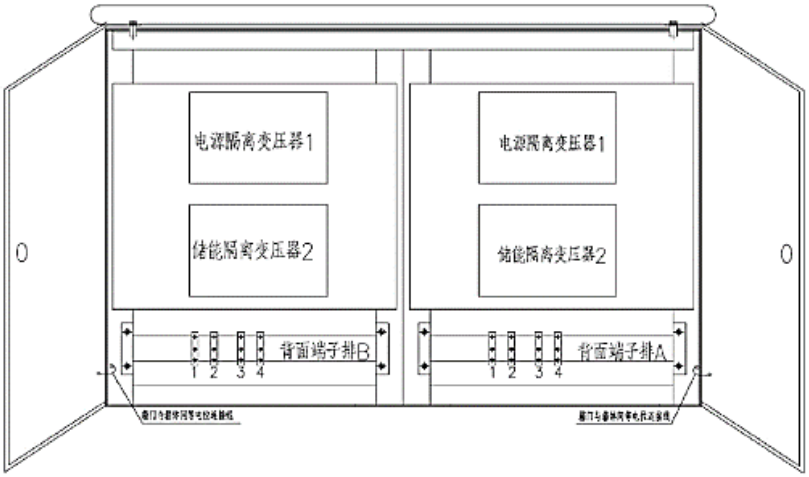

Figure 11: Back structure of control box

Please find the backside wiring of control cabinet and the second wiring of its corresponding transformer in **Figure 12** and **Figure 13**.

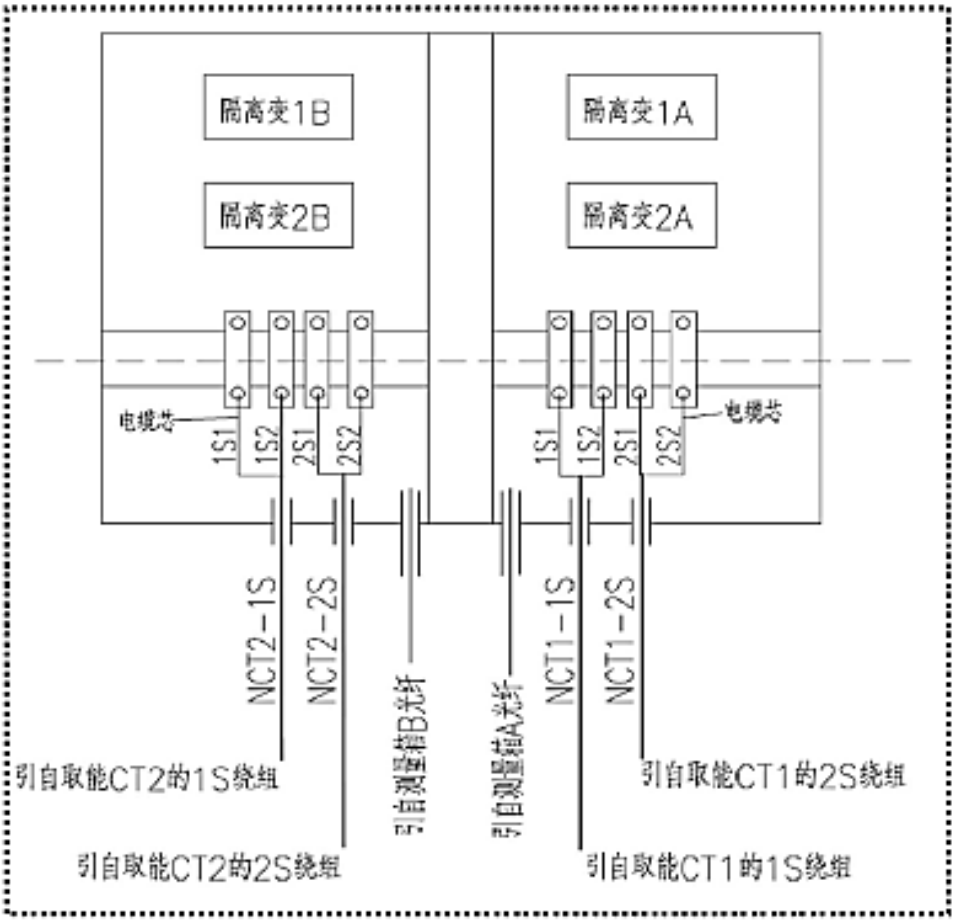

Figure 12: wiring graph of backside control box

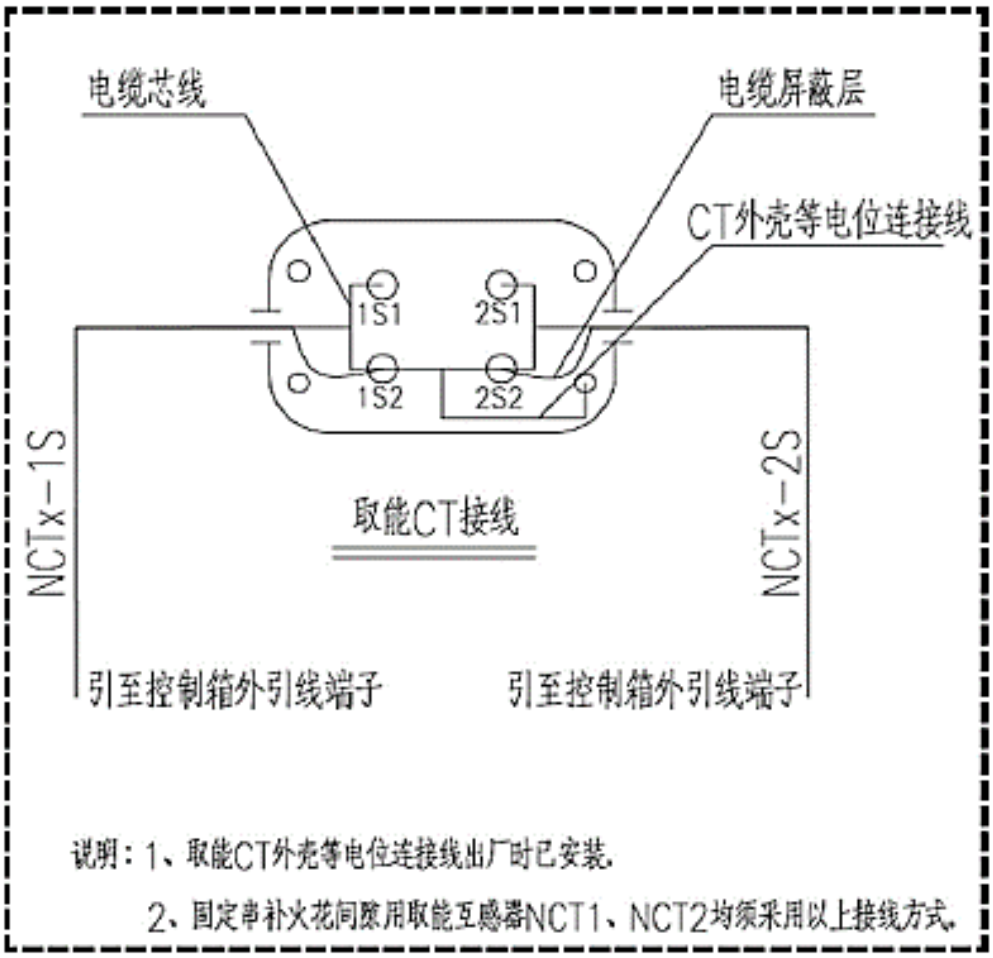

Figure 13: Second wiring of gap transformer

12.6- Inspection and Maintenance

The inspection and maintenance programs of KCX280/60-type spark gap include:

- Appearance inspection of space shell, post insulator, bushing, electrode and grading capacitor and other parts to ensure no damage and leakage.
- All the electrodes, post insulator, bushing and grading capacitor surface need to be cleaned with cloth.
- Measure the capacitance value of grading capacitor, low voltage shunt capacitor, and capacitance bushing and compare with the factory value to confirm the components'' good condition. If the capacitance value is significantly changed (change of volume bigger than 10%), the spare parts should be replaced as soon as possible and contact us.
- When there are burn marks on the surface of graphite electrode, please clean it with cloth.
- Please check and confirm that all the bolts and nuts are fairly fastened, especially the electrode, adjusting mechanism and its ruler fastening bolt.
- It is suggested to note down all the inspection results for further check.
- Take field test of the trigger system of the gap to confirm all the components in the control box are working normally and functioning reliably.
- It is suggested to carry on inspection and maintenance of spark gap once a year.

12.7- Installation, Operation and Maintenance Notes

- Before installation, please first check the packing list and accessories to ensure no obvious crash or damage to the appearance of the products. If any, please contact us as soon as possible.
- During installation, please make sure to fasten every bolt. Pay attention to protect any fragile and vulnerable components, such as graphite electrode wearing, etc. The graphite electrode should be installed by our professional engineers.
- When adjusting the flashover gap distance, only one personnel is allowed to be left in the gap shell so as not to affect the accuracy of regulation. The maximum permissible error is ± 0.5mm of field adjustment and setting value.
- Flashover gap distance is adjusted according to the requirements of over-voltage protection; therefore, the gap distance shall not be arbitrarily changed.
- No foreign body allowed to be left on the electrode surface, it must be carefully examines after maintenance.
- Graphite electrode is fragile. Please don't tighten the bolts when they are not obviously loose. If the graphite electrode bolts are found obviously loose, it should be tightened according to the instruction strictly, so as not to damage the electrode.
- When maintaining the spark gap shell, safety is highly required. In order to guarantee the distance of flashover gap shell not to be irreversible (i.e. plastic) changed due to internal gravity changes, only two staff is allowed in the shell and the total weight should be not more than 150kg.
- The control box at the bottom of the spark gap shell is one of the key accessories. It can be opened only by professional maintenance staff.
- The connection terminal at the bottom of spark gap should be flexible connected with the low voltage bus, avoiding long-term stress to the bushing.
- Please contact us as soon as possible if the operator find any abnormal gap test signal.
- The spare parts should be stored in the warehouse with an ambient temperature of -20°C to +35° C, humidity of not more than 70% and no acid, alkali or other corrosive substances.

12.8- Attached graph

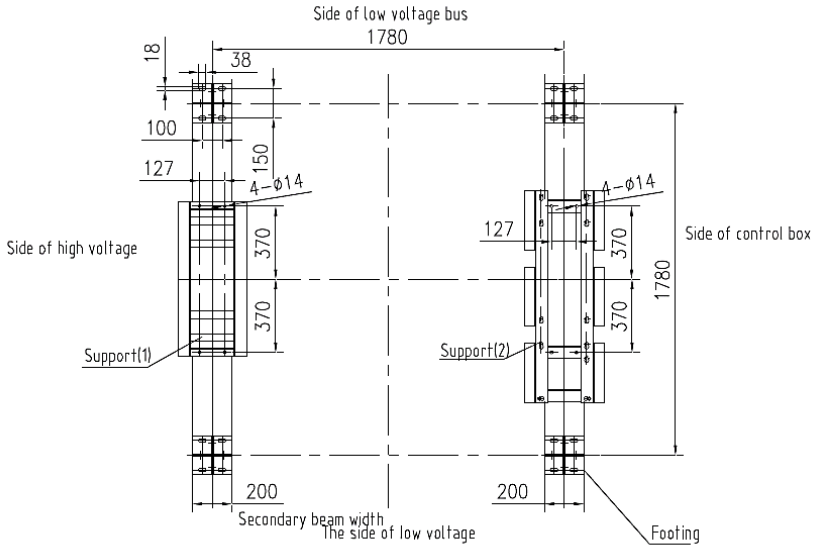

Attached Figure 1: gap installation foundation graph

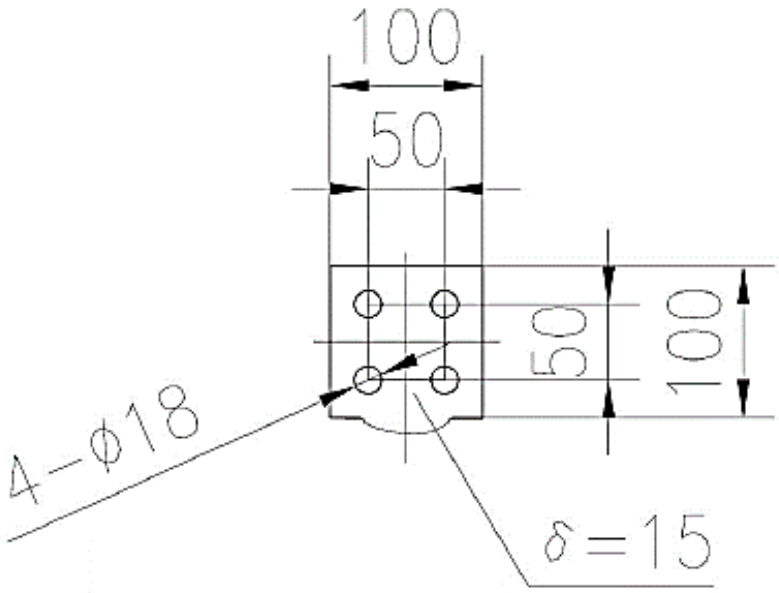

Attached Figure 2: spark gap (aluminum) terminal dimensions

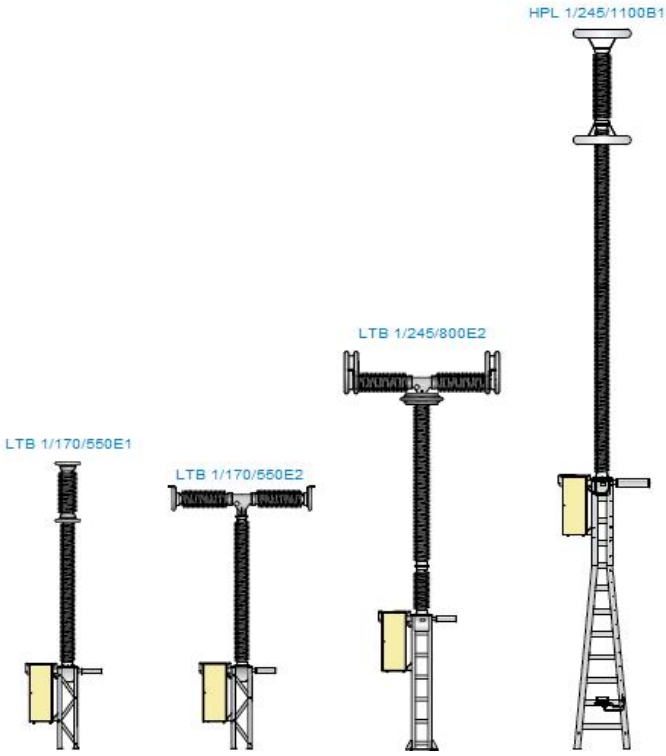

13- FSC BY-PASS SWITCH (BS) MANUAL

13.1- Reactive Power Compensation - Boosting Transmission Capacity

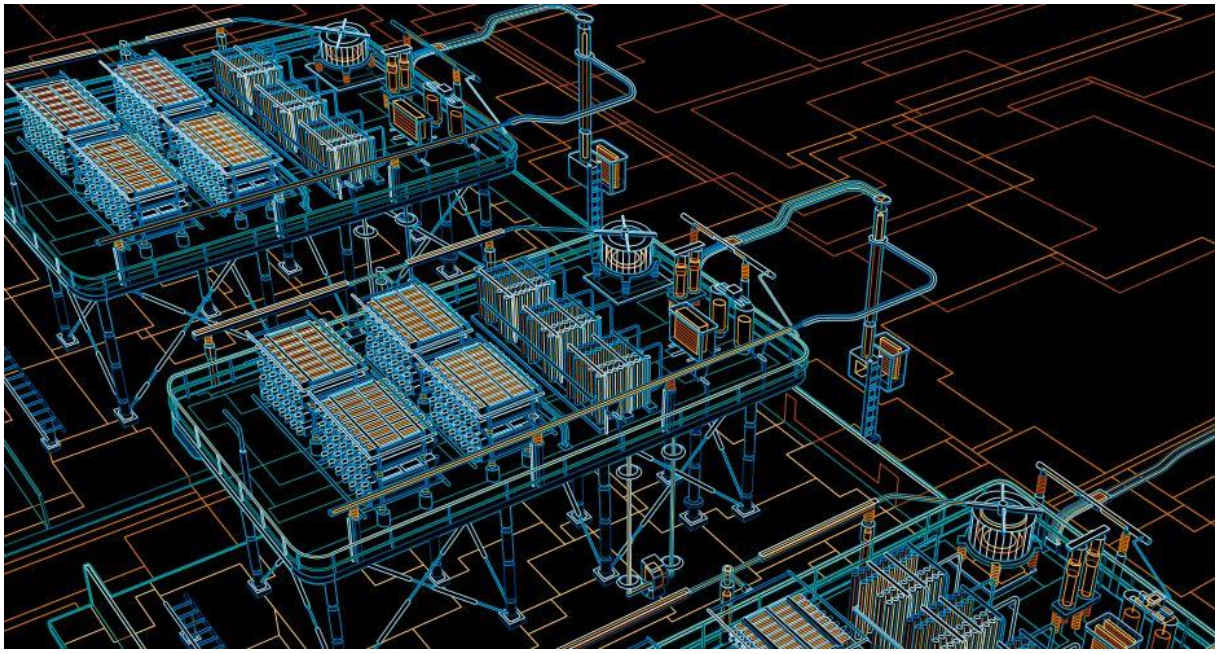

13.1.1- Introduction:

ABB implemented its first series compensation solutions in the 1950s. Since then, ABB has continued to develop and refine this technology. Today, our know-how and problemsolving capabilities help make us the world leader in effective power transmission.

13.1.2- Compensating inductive reactance

Series compensation employs capacitors for compensating the inductive reactance of long lines. It is a highly effective and economical means of improving power transfer. Suitable for both new and existing lines, series Compensation increases power transfer capability by raising the transient stability limit as well as improving the voltage stability. Another important benefit is reduced transmission losses by optimizing the sharing of active power between parallel lines.

Extracting more power out of existing lines can eliminate the need to build new lines, which all adds up to reduced environmental impact, and significant cost and time savings.

13.1.3- By-pass systems for series capacitors

Common for all installations in electrical power systems is that there are protective systems for overloads and faults, and that parts of the installations can be removed from service.

Series compensation - Protection diagram:

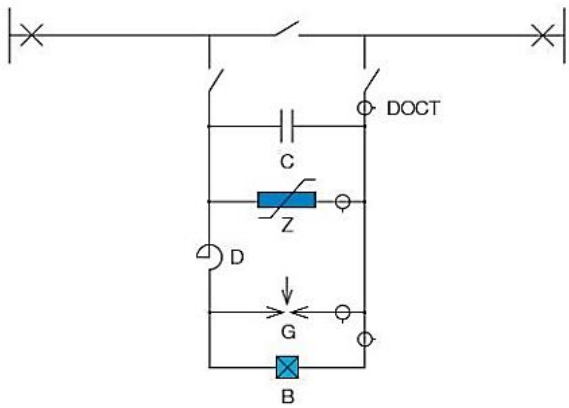

Figure 1: Series Compensation protection diagram

- **C** - Capacitor bank
- **Z** - Metal Oxide Varistor (MOV)
- **D** - Current limiting reactor
- **G** - Triggered Spark-GAP
- **DOCT** - Digital Optical Current Transducer
- **B veya BS** - By-pass switch (ABB, In the Kayseri Capacitor Bank Project - EMTA Energy)

These are some of the reasons why series capacitors are equipped with a by-pass system:

This by-pass system, which is connected in parallel with the capacitor bank, is designed to limit the voltage over the bank. The by-pass system thus has a protective function but is also used to switch the series capacitor in and out during planned measures, such as regulation of series capacitance as well as any maintenance on the series capacitor bank or other component parts.

There are a number of different solutions for by-pass systems:

The economy aspect is naturally important, and the grid's configuration, its electrical properties and customer-specific requirements for protective functions come into play when choosing a by-pass system.

Nearly exclusively, modern series compensation systems use metal oxide varistors as overvoltage protection and often together with triggered spark gaps (see Figure 1).

Common for all by-pass systems however, is that series capacitor by-pass switches are always included.

13.2- ABB By-pass Switch

13.2.1- Series capacitor by-pass switches

Although series capacitor by-pass switches sometimes utilize the same or similar design as that of a conventional circuit breaker, the application is completely different. The by-pass switch is part of the protective system of series capacitor banks, together with non-linear metal oxide varistors (MOV) and (if applicable) protective spark gaps, and is placed in parallel with the series capacitor bank.

The main purpose of the by-pass switch is for deliberately bypassing and inserting the series capacitor (planned operation) and for protective by-passing of the series capacitor in case of faults.

Figure 2: One pole of an 1100 kV by-pass switch

The **standard operating sequence** is **C-0.3s-OC**, which means that a conventional circuit breaker cannot be used as a bypass switch due to this requirement.

Under normal service conditions when the series capacitor is connected in series with the overhead line, the by-pass switch is in the open position and always prepared to by-pass the series capacitor bank in case of faults or any planned operations.

13.2.2- The main stresses related to switching of by-pass switches are the following:

a. By-passing of series capacitor:

The by-pass switch must be able to by-pass the series capacitor bank when it is precharged to its protective level (limiting voltage of the overvoltage protector) and consequently withstand the associated inrush current from the capacitor bank superimposed on the line fault current.

b. Insertion of the series capacitor:

The by-pass switch must be able to transfer the load current from the by-pass circuit path to the series capacitor path and withstand the associated recovery voltage, with peak values of up to its protective level, without restriking.

In addition to the above-mentioned requirements, the bypass switch must be able to carry the rated current and the rated short-circuit current in the closed position, as well as withstand the overvoltages specified across the open gap and phase-to-earth.

It should be noted however, that the by-pass switch is not intended to interrupt short-circuit currents which may ocur in the system.

13.3- Explanations and Definitions

13.3.1- Standarts

IEC 62271-109 is applicable for series capacitor by-pass switches.

It should be noted that ANSI/IEEE do not have a specific product standard for series capacitor by-pass switches, although **IEEE 824** (Series Capacitor banks in power systems) specifies the majör requirements for components included in the by-pass systems.

13.3.2- Ratings

In general, the main ratings as defined in **IEC 62271-1** (e.g. rated current, rated short-time withstand current, rated frequency, etc.) are also applicable for by-pass switches.

Some additional ratings which are relevant for by-pass switches only and their application have been listed below:

13.3.3- Rated voltage to earth

The rated voltage to earth is the maximum system voltage for which the by-pass switch is designed.

13.3.4- Rated voltage across the open by-pass switch

The **rated voltage** (phase-to-phase) across the open by-pass switch shall be equal to or higher than the rated voltage of the capacitor bank (**Un = Xn x In**) multiplied by √3.

13.3.5- Rated by-pass making current

The rated by-pass making current is the peak value of the current that the by-pass switch should be capable of making. The by-pass making current is the sum of the capacitor bank discharge current component and the power frequency fault current component. The frequency of the by-pass making current is associated with the frequency of the rated by-pass making current.

A typical value of the rated by-pass making current is in the range of 70 - 130 kA (peak).

13.3.6- Frequency of the rated by-pass making current

The frequency of the rated by-pass making current is equal to the frequency of the capacitor bank discharge current frequency.

A typical value of the frequency of the rated by-pass making current is in the range of 500 – 1000 Hz.

13.3.7- Rated by-pass insertion current

The rated by-pass insertion current is **the RMS value of the power frequency current** that the by-pass switch should be capable of transferring from the by-pass switch circuit path to the main series capacitor path

13.3.8- Rated re-insertion voltage

The rated re-insertion voltage is the peak value of the transient recovery voltage that the by-pass switch should be capable of withstanding, without re-strike, after clearing the by-pass insertion current.

The rated re-insertion voltage should be equal to the protective level of the series capacitor bank

13.4- Summary of ABB By-pass Switch Data

13.4.1- Performance data in brief:

- **Installation:** Outdoor/Indoor
- **Insulation:** SF6 or SF6/N2
- **Insulators:** Composite (light grey) or porcelain (brown or light grey)
- **Creepage distance:** 25 mm/kV, phase - phase voltage (Longer on request)
- **Service conditions şartları (**Ambient temperature and Design altitude**):** The ambient temperature should be between -50 and +50 ° C and the height above sea level should be no more than 1000 meters. (optionally the level may be higher).
- **Type of Operation:** Single-pole

13.4.2- Types of ABB By-Pass Switch:

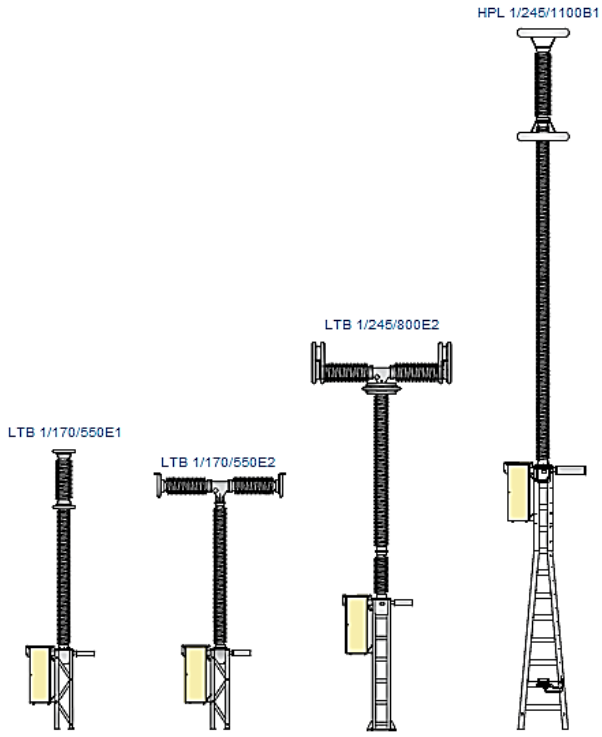

Figure 9: Types of ABB By-Pass Switch

Type	LTB 1/170/550E1	LTB 1/170/550E2	LTB 1/245/800E2	HPL 1/245/1100B1
Rated voltage to earth	362 - 550 kV	362 - 550 kV	800 kV	1100 kV
Rated voltage across open gap	170 kV	245 kV	245 kV	245 kV
Rated frequency	50/60 Hz	50/60 Hz	50/60 Hz	50 Hz
Rated short-time current	63 kA/3 s	63 kA/3 s	63 kA/3 s	63 kA/3 s
Rated current	4000 A	4000 A	4000 A	6300 A
By-pass making current (peak)	120 kA at 1 kHz	120 kA at 1 kHz	120 kA at 1 kHz	160 kA at 1 kHz
Rated re-insertion voltage	280 kV	470 kV	470 kV	390 kV
By-pass insertion current	6800 A	6800 A	6800 A	10000 A
Operating sequence	(O)C-0.3s-OC-3min*)-OC	(O)C-0.3s-OC-3min*)-OC	(O)C-0.3s-OC-3min*)-OC	(O)C-0.3s-OC-3min*)-OC

Table 1: Type Specifications of ABB By-pass Switch

(*)Time between auto-reopening operations can also be; t=15s or t=1min.

13.5- Operating Mechanisms

For highest operational reliability, ABB has used operating mechanisms with energy mechanically stored in springs for many years. This solution offers considerable advantages in that the energy in the tensioned springs is always available. It also ensures a high degree of full reliability and minimal needs for maintenance of the operating mechanisms and thus, the by-pass switch on the whole.

In by-pass switch applications, the normal position of the switch is open and the nominal operating sequence is C-0.3s-OC.

The by-pass switch uses the same type of spring operating mechanisms as a circuit breaker but with **reversed function**.

The closing spring is part of the linkage system and placed near the mechanism housing of the by-pass switch. The closing spring generates the required driving force to close the by-pass switch.

The springs in the BLG housing are used for opening the bypass switch and at the same time, charging the closing spring. With over 50,000 BLG operating mechanisms in service, designed for widely varying conditions, ABB is confident that the design is one of the most reliable on the market (see Figure 4.)

Operating Mechanism of by-pass switch:

Figure 10: Operating Mechanism of by-pass switch

Left side: BLG operating mechanism with opening springs and **Right side:** BLG operating mechanism with closing spring

13.6- Testing and Inquiry Data

Type Tests:

The following tests are applicable for by-pass switches:

1. Dielectric tests
2. Peak and short-time withstand current tests
3. Mechanical operation tests
4. Temperature rise tests
5. By-pass making current tests
6. Insertion current tests

Tests 1-4 are similar tests to those of conventional circuit breakers.

Tests 5-6 are specific tests to verify the requirements for bypassing and re-inserting the capacitor bank.

Note: Other tests defined for conventional circuit breakers, such as short-circuit breaking tests, short-line fault tests, outof- phase switching tests, etc., are not applicable for by-pass switches

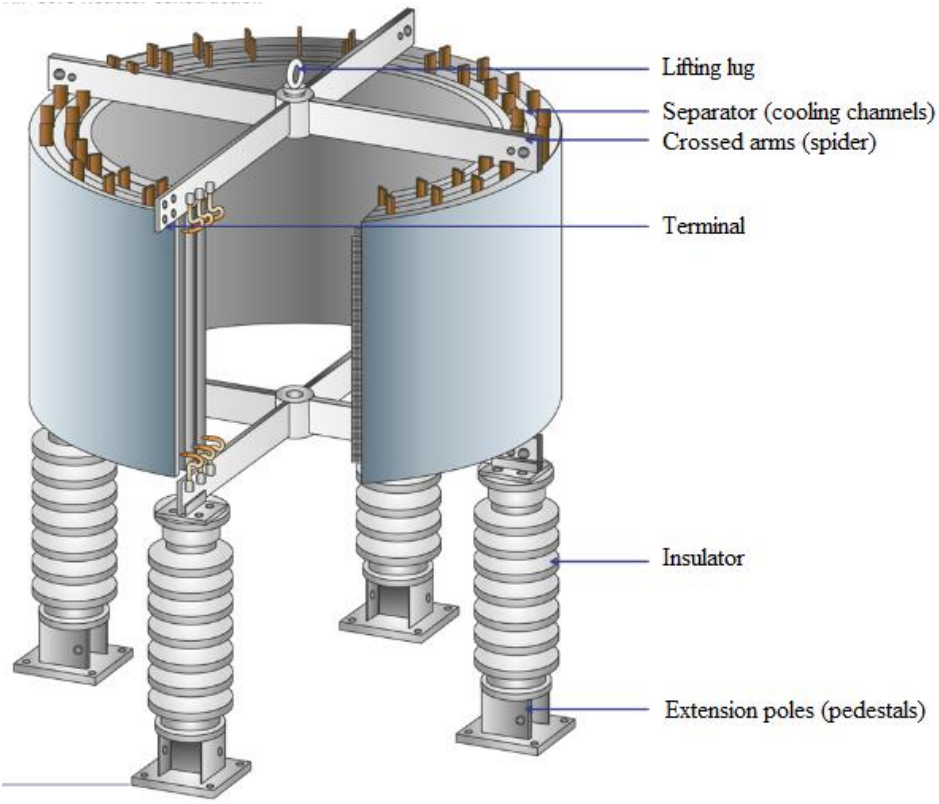

14- FSC DAMPING REACTOR MANUAL

14.1- Notice

For reactors equipped with the sound depressing device, the cylindrical side screen (noise insulation layer outside of coil) thereof contain sound absorbing wool inside, which is difficult to get dry once wetted by rain and thus can not regain the original insulation strength soon. In view of this, the following requirements are put forward for the installation and maintenance entity's attention:

14.1.1- Direct exposure of reactor proper (the coil with noise insulation layer outside) to rain or snow is strictly forbidden during storage and installation. The rain cloth covering the top of reactor must not be uncovered from unpacking of the packing cases till completion of installation of upper sound screen (top cover). In case of uncovering the rain cloth for product inspection or testing, it shall promptly be restored and bound tightly with ropes to avoid being torn open by strong wind.

14.1.2- During installation and construction, installation personnel shall carefully check whether the rain cloth is tightly bound and effectively protecting the cylindrical side screen.

14.1.3- The rain cloth covering the coil shall be removed after completion of installation of the top cover.

14.1.4- During equipment maintenance and repair, dust accumulated on surface of the reactor can be blew off by compressed air. **Flushing the reactor with high pressure water gun** is **strictly forbidden** so as to avoid the cylindrical side screen from being exposed to water.

Beijing Power Equipment Group

14.2- Installation Instructions

14.2.1- Preparation for Installation

Firstly, please carefully read through the outline drawings provided by BPEG for Installation, so as to get acquainted with the structure and the configuration of the reactor, including whether protection enclosure (including top cover, wind shield and sound depressing device etc.) and other associated devices are provided. The installation method for every individual part will be introduced detailed in the following text.

After arrival of the reactor and its associated parts at site and before commencement of installation, the related installation personnel shall prepare the special tools required for installation, and then check the packing cases in accordance with the packing list provided by BPEG for completeness and intactness of goods and find the corresponding cases for individual parts according to the outline drawings provided by BPEG so as to improve the efficiency of installation.

Check the installation foundation on the site to confirm its compliance with the outline drawings for installation and verify the accuracy of the pitch diameter, equal division, levelness, verticality and dimension of the fabricated foundation. In case of any unconformity, please make remedies suitable for the requirements for installation condition at first. Upon completion of the above works and confirmation of correctness of the prepared foundation, the installation procedure may be commenced.

Note: during the installation of reactor, some bolts may not be tightened for convenience of installation error adjustment of reactor, however, upon completion of installation, all the bolts shall be tightened and no looseness thereof is permitted. It is suggested by BPEG to use special tools for example special torque wrench to tighten and secure the bolts according to the torque specified in **Table 1** for threads of different sizes. In this way, damage to threads resulted from improper tighten may be prevented, which will facilitate the dismantlement and reinstallation thereafter.

Thread size (metric)	Torque	Thread size (imperial)	Torque
M5	5 Nm	1/4-20	5 ft. lbs.
M6	6 Nm	3/8-16	20 ft. lbs.
M8	15 Nm	1/2-13	50 ft. lbs.
M10	30 Nm	5/8-11	90 ft. lbs.
M12	50 Nm	3/4-10	145 ft. lbs.
M16	100 Nm	7/8-9	160 ft. lbs
M20	150 Nm	1-8	210 ft. lbs

Table 1: Torque for Regular Thread Sizes

14.2.2- Installation of Bottom Support Structure of Reactor

14.2.2.1- Installation on Foundation with Embedded Bolts

For foundation with embedded bolts, the order from bottom up is usually followed for the installation of bottom support. Particularly speaking, the lowest transition brackets of the bottom support structure shall be installed onto the embedded anchor bolts firstly according to the outline drawings for installation, remember not to tighten the bolts; and then assembly the components including the insulator and the transition brackets etc. successively. During the assembly, adjustment shall be made to achieve the required levelness and alignment. Before assembly of insulator, inspection shall be made thereon to find any visible damage, uniformity in heights and inclination thereof.

In case of problems, please contact timely with the supplier for replacement. The relatively simple bottom support structure bearing minör loads may also be completely assembled before being installed onto the anchor bolt as a whole.

After the bottom support is well installed, lift up the reactor proper and put it in a proper place above the foundation, align the installation flange at the bottom of the reactor proper and the top hole of the support, and place rubber cushion between the two flanges for leveling and then connect the flanges with tightened bolts to complete the installation.

14.2.2.2- Installation on Foundation with Embedded Steel Plate

For this kind of foundation, the support is to be installed by welding the bottom member thereof directly to the embedded steel plate, so the installation order from up down is usually adopted for the bottom support.

That is to say, firstly assemble the components from the reactor bottom flange down including the rubber cushion, transition brackets and insulator with tightened bolts according to the outline drawing for installation. Before assembly of insulator, inspection shall also be made thereon to find any visible damage, uniformity in heights and inclination thereof. In case of problems, please contact timely with the supplier for replacement. The relatively simple bottom support structure bearing minor loads may also be completely assembled before being installed onto the reactor bottom flange as a whole. After assembly of bottom support, the entire reactor shall then be placed on the foundation and alignment shall be made at this time. Finally, the bottom of the support shall be welded to the embedded steel plate. Any gap between the bracket and the embedded steel plate shall be filled up with wedges and well welded, which shall finally be covered with concrete.

No closed loop shall be formed by the metal parts embedded in the concrete foundation for the reactor such as anchor bolts and steel plates, or eddy current thus induced will heat up the metal parts.

If the members at the bottom of the support can not be directly welded to the embedded steel plate in the foundation, BPEG may provided interfacing fittings, such as steel pads for high support legs and channel steel for aluminum transition brackets, which shall also be assembled to the bottom of the support before the latter is welded to the embedded steel plate.

Note: if lifting is required for insulators during the installation, soft rope such as nylon rope or sling belt shall be used. Particularly, for composite insulators, hard ropes such lifting wires shall not be used

in order to avoid damages to the insulator shed. For those relatively heavy and large insulators which shall be lifted vertically, the flange, end cap and connection of sheds shall not be used for lifting.

14.2.2.3- Installation of Tilted Support Structure

14.2.2.3.1- The installed structure is as shown in Figure 1

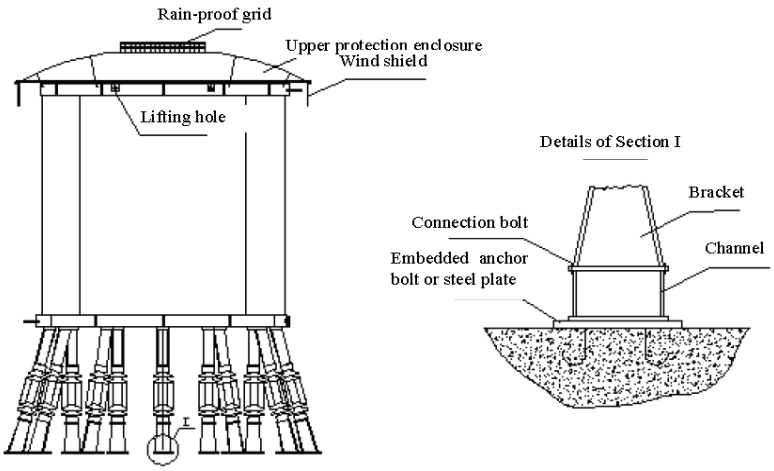

Figure 1: Reactor Structure with Tilted Support

14.2.2.3.2- Secure the support legs with the method described in Section 14.2.2.1 according to the installation drawing provided by BPEG and place rubber cushion on the top flange of the insulator, and tighten all the bolts to complete the installation; or assemble the support legs with the method described in Section 14.2.2.2 and place rubber cushion under the insulator, and level and secure the support with wedges.

14.2.2.4- Installation of High Support Legs

14.2.2.4.1- The installed structure is as shown in **Figure 2**.

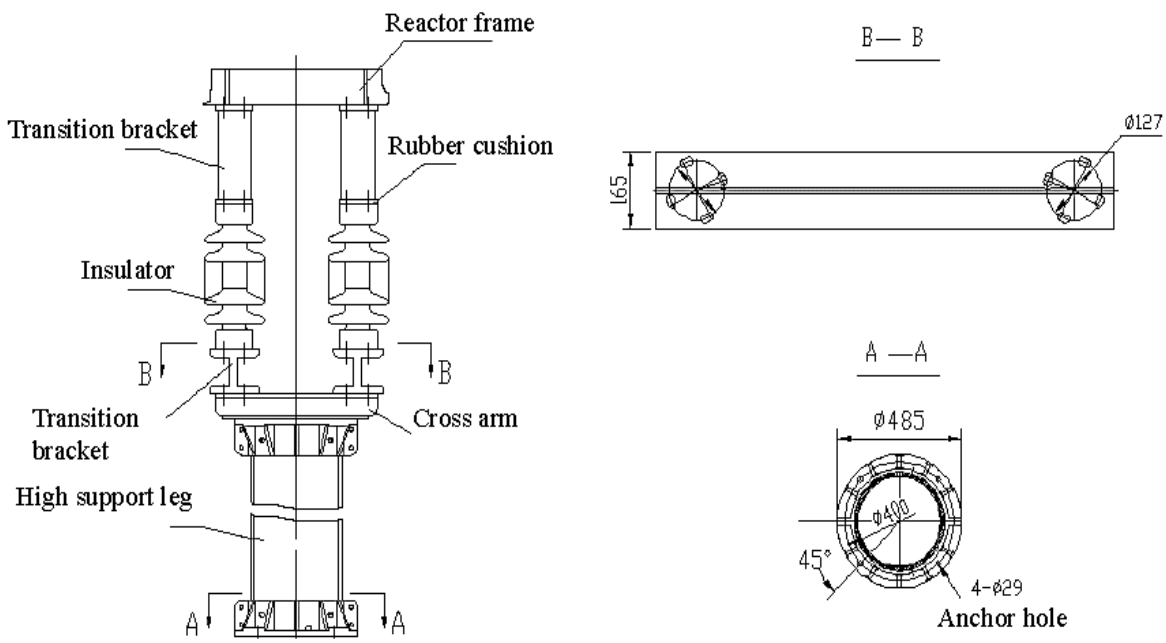

Figure 2: Support Structure with High Support Legs

14.2.2.4.2- Firstly, count the components for assembly against the outline drawings for installation provided by BPEG and check the embedded foundation on the ground to ensure compliance of assembly components and installation foundation.

14.2.2.4.3- The high support leg is comprised of the flanges at both ends and the epoxy glass cylinder or seamless steel tube therebetween, which is usually assembled and delivered to the site as a whole. Upon installation, the high supports shall be secured to the embedded foundation on the ground. For foundation with embedded steel plate, if the lower flange of the high support leg can not be directly welded to the embedded steel plate, please assemble the steel pad provided by BPEG to the lower flange of the high support leg and then weld the former to the embedded steel plate.

14.2.2.4.4- Assemble the transition cross arm (sometimes welded with transition brackets on the top surface) to the flange of the high support leg, and then assemble the insulator, steel brackets and rubber cushion successively according to the drawings, remember not to tighten the bolts. Lift up the reactor and connect the bottom flange of the reactor with the transition brackets. After the reactor is installed in place, tighten all the bolts to complete the installation.

Note: when installing the transition cross arm, please refer to the installation drawings to dispose the cross arm according to the arrangement of the installation holes on the top surface thereof. Mis-oriented cross arm will cause misalignment of installation holes in the assembly of reactor and high support legs, and thus impeding the installation of reactor.

14.2.3- Installation of Reactor

Note: Before fixing a reactor proper to the foundation support, check against the outline drawing if the orientations of the upper and lower outgoing line terminals are in compliance with the requirements specified in the drawing.

14.2.3.1- Installation of Reactor in Horizontal Arrangement

14.2.3.1.1- The reactor shall be assembled and installed according to the installation outline drawing and the serial numbers with an installation structure as shown in **Figure 3**.

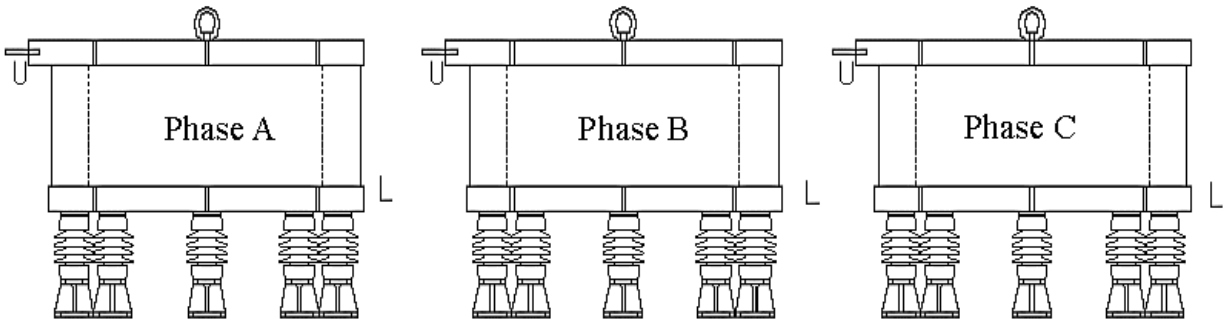

Figure 3: Assembly Diagram of Three Single-phase Reactors in Horizontal Arrangement

14.2.3.1.2- Firstly, complete the assembly of the bottom support for reactor with one of the two methods mentioned above according to the installation outline drawings supplied by BPEG; secondly complete the installation of the integral reactors. Under normal circumstances, rubber cushion supplied by BPEG shall be fixed on top flanges of insulators. Finally, tighten all bolts.

14.2.3.2- Installation of Three-phase Reactors in Vertical Arrangement

14.2.3.2.1- The reactor must be installed with a mounting structure **as shown in Figure 4** according to the drafting drawings and serial numbers.

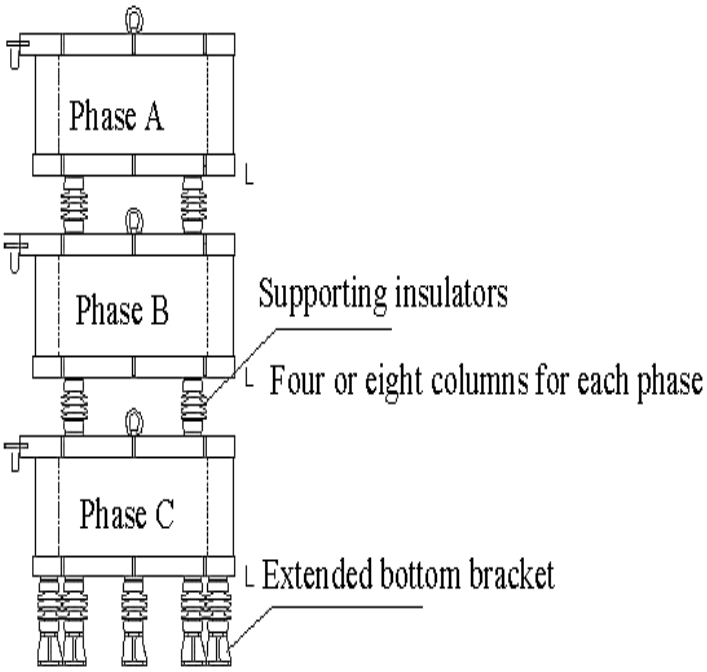

Figure 4: Structure Diagram for Three-phase Reactors in Vertical Arrangement

14.2.3.2.2- Firstly, according to the requirements of the drawings supplied by BPEG, install phase C reactor onto the foundation platform using the same method as that for the reactors in horizontal arrangement specified in Section 14.2.3.1.

14.2.3.2.3- Install the insulators on the top flanges of the phase C reactor. According to assembly serial numbers, lift and place the phase B reactor onto the supporting insulators. Put on the rubber cushion and then connect phase B reactor and the insulators with bolts.

14.2.3.2.4- Install phase A reactor using the same method as that for phase B reactor.

14.2.3.2.5- **Adjustment:** After the installation of the three reactor phases, adjust the integral verticality of stack structure. The deviation of integral verticality shall be less than 10 mm. Finally, tighten all mounting bolts.

Note: During installation of three phases of reactors in vertical arrangement, the upper, intermediate and lower reactors phases shall be installed in accordance with the combination of grouping serial numbers specified in the test report supplied by BPEG. The grouping serial numbers are shown on the nameplates or on the side of the outgoing line arm. During assembling it is required to lift only one segment of coil in one try.

14.2.3.3- Installation of Reactors with Two Phases in Vertical Arrangement and One Phase in Horizontal Arrangement

14.2.3.3.1- Refer to Figure 5 for the installation structure.

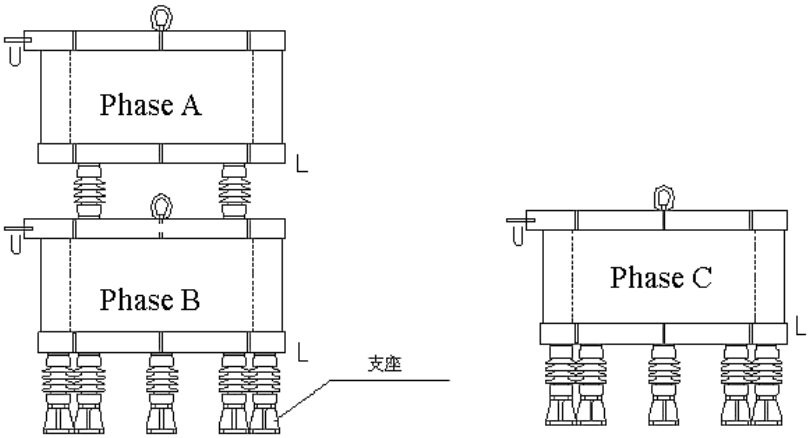

Figure 5: Structure Diagram for Three Phases Reactors with Two Phases in Vertical Arrangement and One Phase in Horizontal Arrangement

14.2.3.3.2- The stacked reactor phases shall be installed using the same method as that for the three-phase reactors in vertical arrangement, and the horizontal phase shall be installed according to the installation method for reactors in horizontal arrangement specified in Section 14.2.3.1.

Note: During installation pay attention to the sequences of upper phase and side phase, in addition, the serial numbers of the three reactors shall be consistent with the combination mode specified in the test report.

14.2.3.4- Installation of Adjustable Reactor

14.2.3.4.1- Installation of Adjustable Reactor with Upper and Lower Coils

14.2.3.4.1.1- Refer to **Figure 6** for the installation structure.

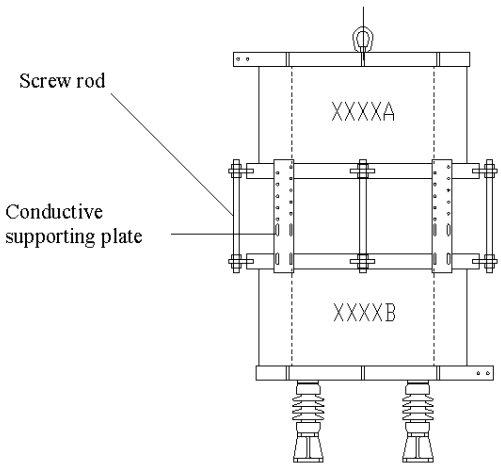

Figure 6: Structure Diagram for Adjustable Reactor with Upper and Lower Coils

14.2.3.4.1.2- This kind of adjustable reactor consists of upper and lower coils. During installation, attention must be paid to the grouping numbers. The lower coil shall be installed using the same method as that for the horizontally-arranged reactor specified in Section 14.2.3.1. The upper and lower coils shall be supported and fixed with the adjusting bolts or conductive supporting plates. During connection of the conductive supporting plate, the connecting part shall be ground and applied with conductive paste.

14.2.3.4.1.3- The distance between the upper and lower coils can be adjusted in accordance with the client's requirements. During adjustment the screw rods shall be symmetrically adjusted in height. Refer to the parameters specified in the nameplates (refer to the information on commissioning of filter reactor).

14.2.3.4.1.4**-** After completion of field installation and commissioning, if the inductance value is required to be fixed by the client, the excessive parts of the adjusting screw rod and conductive support can be cut off to ensure the Electric insulation distance.

Note: The diameters of the upper and lower coils are equal. Ensure that the upper coil and the lower coil are for same phase, and the serial numbers of the two coils shall be same except for the last letter. If the serial number of the upper coil is xxxxA, then the serial number of the lower coil must be xxxxB. Upper and lower coils with unmatchable serial numbers are for different phases, and can neither match with each other during installation nor deliver reliable performance of design parameters.

14.2.3.4.2- Adjustable Reactor with Main and Auxiliary Coils

14.2.3.4.2.1 **-** Refer to **Figure 7** for the installation structure.

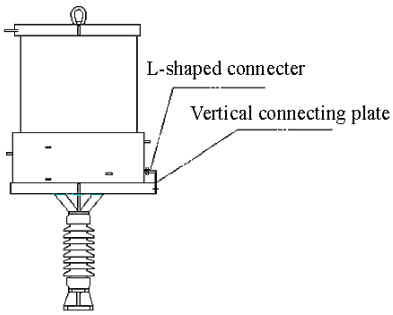

Figure 11: Structure Diagram for Adjustable Reactor with Main and Auxiliary Coils

14.2.3.4.2.2- The reactor consists of two coils, i.e. main coil and auxiliary coil, which are integrated into one. The adjustable reactors with main and auxiliary coils shall be installed using the same method as that for single coil reactors in horizontal arrangement and vertical arrangement.

14.2.3.5- Installation of Thyristor Controlled Reactor (TCR)

The TCR generally consists of upper and lower coils which form one phase. The installation method is similar to that of the stacked phases of reactors with two phases in vertical and one phase in horizontal arrangement (Section 14.2.3.3).

If the TCR is provided with protection enclosure, wind shield or other auxiliary devices, the upper coil can be temporarily placed at a location in appropriate height above the ground and assemble the wind

shield and the lower frame of the upper coil on the ground; and then lift the upper coil and assemble it with the intermediate support. Refer to Section 14.2.4.4 for the details of installation of wind shield.

Note: Ensure the upper coils and the lower coils are for the same phase, that is the serial numbers of the two coils shall be same except for the last letter. If the serial number of the upper coil is xxxxA, then the serial number of the lower coil must be xxxxB. Upper and lower coils with unmatchable serial numbers are for different phases. They can neither match with each other during installation nor deliver reliable performance of design parameters.

14.2.4- Installation of Protection Enclosure

Please carefully read through the outline drawings provided by BPEG for installation, so as to make clear whether the reactor to be installed is equipped with the associated devices such as the upper protection enclosure, rainproof grid, wind shield, side noise enclosure and lower noise enclosure, and if any, get acquainted with their types and serial numbers. Subsequently, find out the corresponding equipment accessories from the packing cases as per the type and serial number.

14.2.4.1- Assembly of Upper Protection Enclosure

The upper protection enclosure supplied by BPEG is made of the fiber-glass epoxy plastic with environment-friendly glass wool (if any) adhering to its surface. It takes two forms: one is the once-formed circular structure with the diameter less than 2200 mm and round vent hole cut in the center; the other consists of two semicircles of the same dimension and serial number with the diameter greater than 2200 mm (including 2200 mm). Such two semicircles are assembled to form a round vent hole in the center, at the edges of the semicircles are designed with the lapping joints connected by the bolts.

During the installation, the two semicircles of the split-type upper protection enclosure are firstly assembled into a whole with the rubber cushion (if any) provided between the lapping joints. The rubber cushion is applied with the epoxy glue and tightened with the bolts.

Note: the two semicircles of one protection enclosure are placed in the same packing case and if several upper protection enclosures in pair are placed in one packing case, please ensure the numbers or marks of the components shall be completely consistent, or else, significant error will occur to the mounting hole at the lapping joints during the assembly and the sound installation can not be ensured.

14.2.4.2- Installation of Rainproof Grid

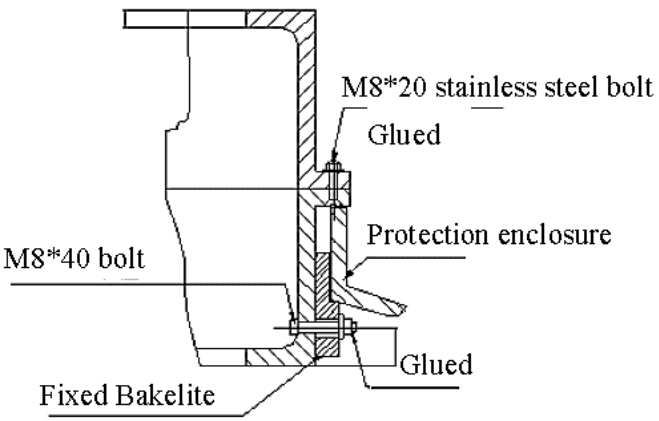

Figure 8: Installation of Rainproof Grid

All rainproof grids are internally installed and refer to Figure 8 for the installation drawing.

Firstly, place the rainproof grid on the vent hole of the upper protection enclosure and install the fixed bakelite block between the upper protection enclosure and the rainproof grid with the bolts, thus the pre-tightening force is formed therebetween to prevent looseness of the grid.

Note: both the rainproof cap and rainproof grid are integral parts of the upper rotection enclosure, and any protection enclosure must be provided with rainproof grid.

14.2.4.3- Installation of Upper Protection Enclosure and Reactor

14.2.4.3.1- Refer to the **Figure 9** for the installation of the upper protection enclosure.

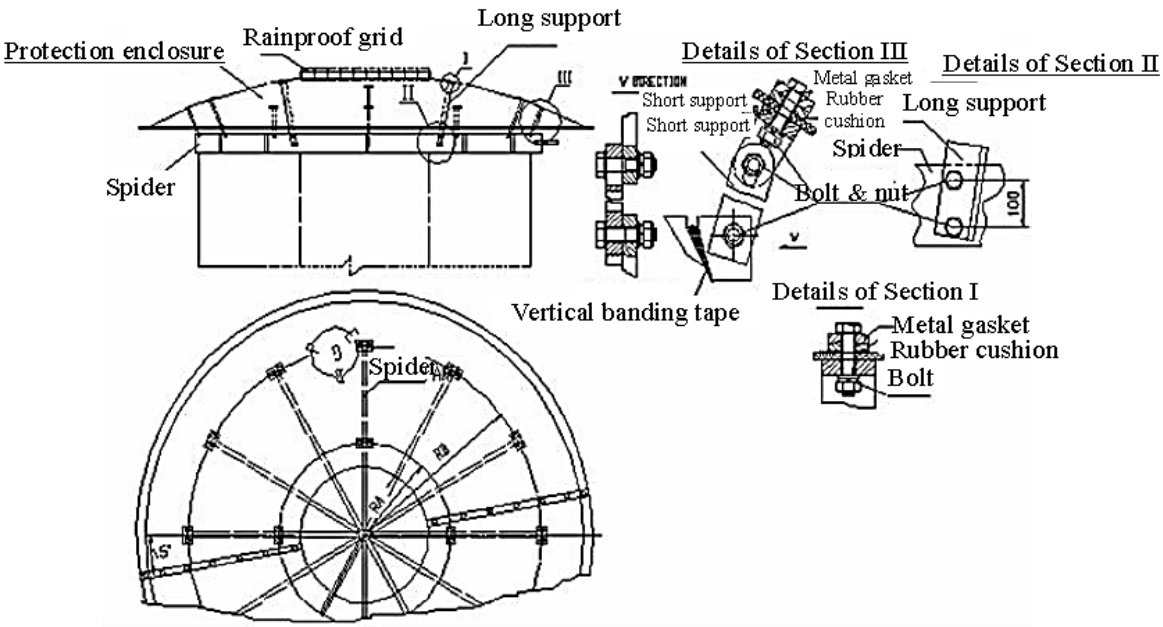

Figure 9: Installation of Upper Protection Enclosure

14.2.4.3.2- For the upper protection enclosure only with the external supports, due to its small size, it is generally preferred to assembly the rainproof grid onto the upper protection enclosure on the ground firstly (according to 14.2.4.2) and then install successively the components such as the external support, rubber cushion and pressure plate according to the mounting holes on the surface of the upper protection enclosure with the fasteners such as the bolt, nut, flat washer and spring washer as per the drawings, however, the bolt shall not be tightened. Upon the completion of the assembly of all components, lift the overall upper protection enclosure to the appropriate location at the upper end of the reactor and connect the mounting hole of the lower end of the external support and that of the upper frame spider of the reactor with the bolts. After all supports are adjusted, tighten all the bolts.

14.2.4.3.3- For the upper protection enclosure with both the external support and internal support, due to its large size, the rainproof grid shall be generally installed later for the purpose of the construction safety. In other words, firstly connect the components such as the internal and external supports to the upper protection enclosure successively as per the steps in 14.2.4.3.2 and the drawings, and then assembly the protection enclosure and the reactor coil. Since the rainproof grid has not been installed, the construction personnel standing on the upper end of the reactor can manually install and adjust the location of the internal support through the vent hole, which is both

safe and convenient. Upon the completion of the installation of the upper protection enclosure and reactor, install the rainproof grid onto the upper protection enclosure by the above-mentioned installation method and finally tighten all the bolts.

Note: the upper protection enclosure shall be lifted with the cross rope to ensure the steady lifting.

14.2.4.4- Installation of Wind Shield

14.2.4.4.1- The reactor for special applications such as the thyristor controlled reactor consisting two coils shall be equipped with the wind shield as shown in **Figure 10**. The wind shield includes the upper part and the lower part, and the former is also composed of two semicircles, which is similar to the upper protection enclosure in structure except that the mounting holes for connecting the reactor spider and the lower part are provided at its top and circumferential edge respectively.

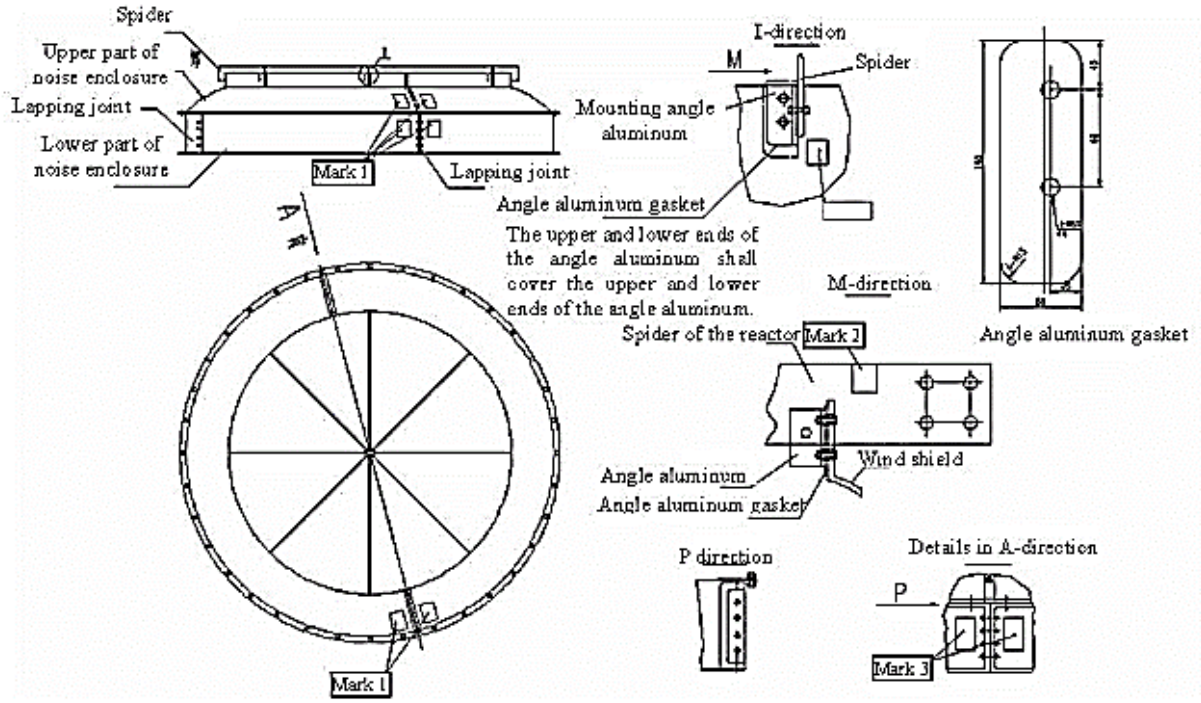

Figure 10: Installation Structure of Wind Shield

14.2.4.4.2- Prior to the installation of the wind shield, please carefully read through the outline drawings provided by BPEG for installation so as to get acquainted with its individual integral parts. In general, after the bottom support structure, lower coil and middle support structure of the thyristor controlled reactor are well installed (see 3.5 for the installation method) successively, the upper coil of the thyristor controlled reactor is lift up from the ground and put it in a proper place, and the upper part of the wind shield is then installed at the bottom of the thyristor controlled reactor.

14.2.4.4.3- When performing the installation, remember that one end of the lower outgoing line spider of the thyristor controlled reactor is marked, find out the one out of two semicircles of the upper part of the wind shield with the same mark, insert the spider slot installed at the marked place into the outgoing line spider, at this time other slots of the upper wind shield shall also be inserted into the corresponding spider of the lower reactor frame smoothly. Connect the reactor spider and the upper part of the half wind shield with bolts through angle aluminum with angle aluminum gasket

(see Figure 10) installed between the angle aluminum and the side wall of the wind shield. In this way, firstly fix the upper part of this half wind shield without tightening the bolts and then install the other half.

Now pay attention to the mark of the lapping joint of the two semicircles of the upper part of the wind shield, assembly the other semicircle as per the direction indicated by the lapping joint's marks. Install the upper wind shield and the reactor spider together according to the above methods, place the rubber cushion (if any) between the lapping joints of the two semicircles which are then applied with the epoxy glue and connected with the bolts. Finally tighten all the assembly bolts upon the completion of the assembly and adjustment of the upper part of the wind shield and reactor.

14.2.4.4.4- Lift up the upper coils of the thyristor controlled reactor with the upper part of the wind shield installed and then complete the assembly of the thyristor controlled reactor proper (refer to 14.2.3.5 for the assembly method).

14.2.4.4.5- Upon the completion of the assembly of the thyristor controlled reactor as a whole, assembly the lower part of the wind shield onto its upper part. The lower part of the wind shield generally consists of four non-interchangeable parts. Ensure to assembly the individual components as per the direction of their lapping joints' marks, insert bolts into the corresponding mounting holes for fixing and tighten all bolts after all are well adjusted.

14.2.4.4.6- Finally complete the installation of the upper protection enclosure as per the methods as described in 14.2.4.3.4.

Notes:

- **Note-1:** Although the individual components of the wind shield are symmetrical and non-interchangeable, consistent marks at the installation reference place shall be ensured to achieve the rapid and labor-saving installation, or else it will be inconvenient to adjust the location of the mounting hole during the installation.
- **Note-2:** Carefully read through the installation drawings to ensure that the installation location and direction of the angle aluminum gasket are fully in compliance with the requirements of the drawings (the end of the angle aluminum gasket close to the mounting hole horizontally faces the spider and the end away from the mounting hole vertically faces downward), or else, it will not be able to fulfill its function of equalizing pressure, thus affecting the performance and service life of the reactor and even causing accidents.

14.2.4.5- Installation of Upper Noise Enclosure

Appropriate noise reducing & insulating devices (including upper, side, middle and lower noise enclosures) are provided for the low-noise reactor by BPEG as per the specific noise requirements.

The structure of the upper noise enclosure is basically the same as that of the upper protection enclosure except that the former is provided with the environment-friendly sound-absorbing cotton inside it. So the installation method is the same as that for the upper protection enclosure, for details, please refer to 14.2.4.1.

14.2.4.6- Installation of Side Noise Enclosure

14.2.4.6.1- Refer to **Figure 11** for the installation of the side noise enclosure.

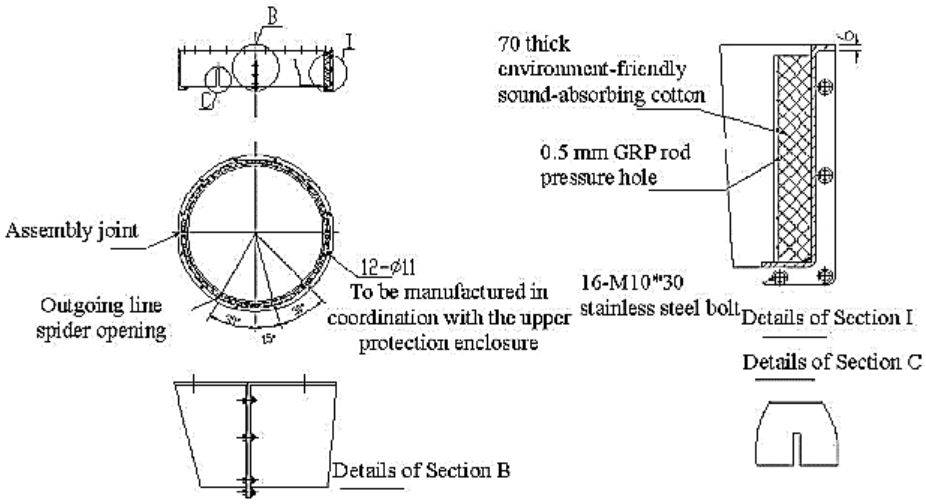

Figure 11: Structure of Side Noise Enclosure

14.2.4.6.2- The side noise enclosure is divided into four parts (one part with an outgoing line spider opening is different from the other three parts) and takes the shape of circle after assembled with the bolts. Its structure and assembly mode are similar to those of the lower part of the wind shield.

14.2.4.6.3- After the reactor as a whole and upper noise enclosure are well installed as per the installation drawings, firstly assembly the special part with upper noise enclosure together (place the outgoing wire spider into the corresponding outgoing wire spider slot) without tightening the bolts; subsequently, install the other three parts at the appropriate places against the special part. The installation method and assembly mode are similar to those of the wind shield (refer to 14.2.4.4); finally after all are well adjusted, tighten the bolts successively.

14.2.4.7- Installation of Middle Noise Enclosure

14.2.4.7.1- Refer to **Figure 12** for the installation of the middle noise enclosure.

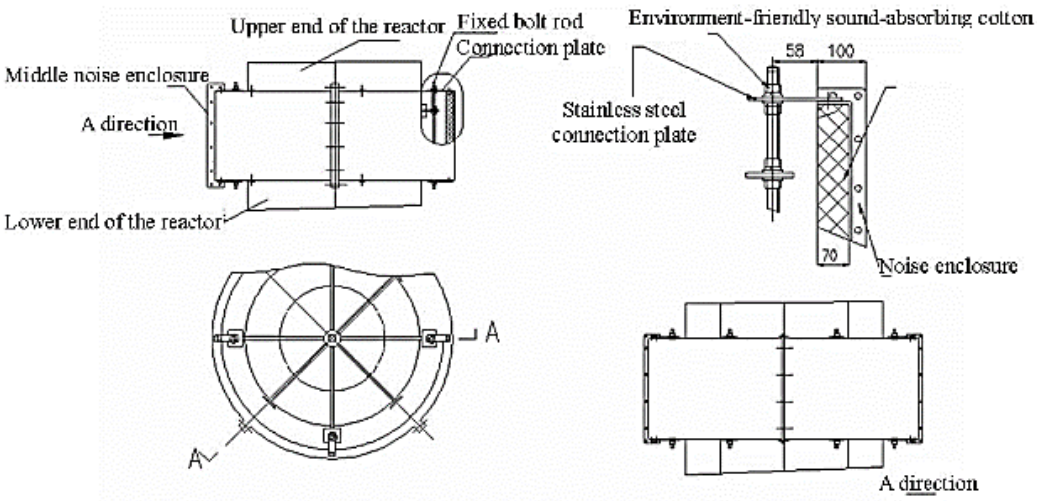

Figure 12: Structure of Middle Noise Enclosure

14.2.4.7.2- The middle noise enclosure is assembled on the adjusting screw rod of the adjustable reactor with upper and lower coils. The middle noise enclosure is divided into four parts and takes the shape of the circle. Its structure and assembly mode are similar to those of the side noise enclosure.

14.2.4.7.3- After the reactor proper is installed according to the installation drawings, screw fixing nuts, flat washers and spring washers on both ends of the fixing screw rod; then put in place the connection plate for the middle noise enclosure and screw on the fixing nuts, flat washers and spring washers to secure it; symmetrically adjust the connection plate up to the appropriate height, connect one end of the connection plate and the mounting hole at the end of the middle noise enclosure with bolts and thus securing this part of the middle noise enclosure; assembly and secure the other parts of the middle noise enclosures one after another as per the above steps and finally tighten all bolts.

14.2.4.8- Installation of Lower Noise Enclosure

14.2.4.8.1- The lower noise enclosure takes the forms of integrated-type and split-type structure, refer to **Figure 13** and **Figure 14** for details.

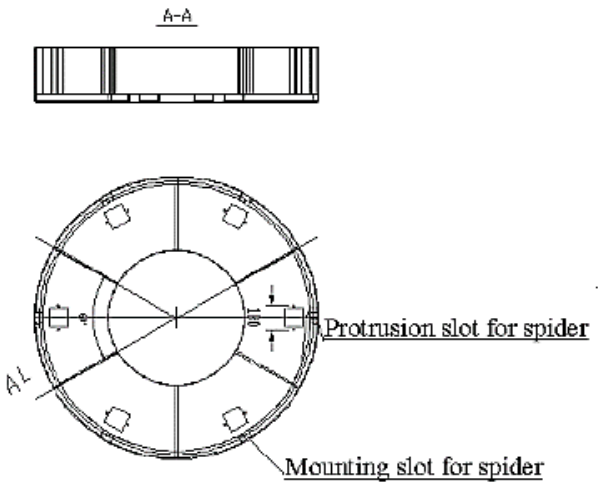

Figure 13: Integrated-type Structure of the Lower Noise Enclosure

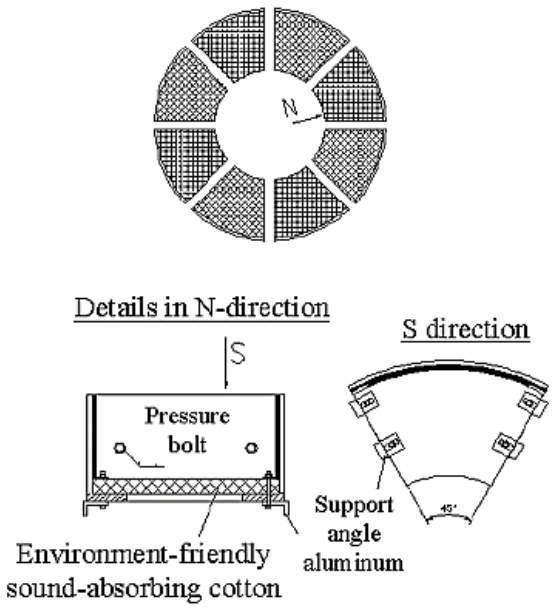

Figure 14: Split-type Structure of the Lower Noise Enclosure

14.2.4.8.2- Install the integrated-type lower noise enclosure as per the installation drawings. After the bottom supports of the reactor are assembled, lift up the lower noise enclosure to align the square slot at its bottom with the transition bracket of the upper end of the support, slide it over to reach the connecting fittings at the lower end of the bracket (meanwhile place gaskets between the noise enclosure and fittings for leveling) and insert bolts into the corresponding mounting holes for securing without tightening them. After the reactor proper is installed and adjusted as per the assembly methods of the reactor in 14.2.3.1, remember to tighten the fixing bolts.

14.2.4.8.3- Install the split-type lower noise enclosure as per the installation drawings. It can be assembled after the reactor proper is installed. Firstly install the fittings at the mounting hole reserved in each spider of the bottom reactor frame and secure it with bolts which are not tightened; place individual parts of the noise enclosures on the fittings between every two adjacent spiders successively, place gaskets therebetween and secure them at the corresponding mounting holes with bolts; finally tighten all the bolts after the complete set of noise enclosure is assembled. When assembling the split-type lower noise enclosure, ensure the outer surface of the individual noise enclosure parts are flush and the overall profile is in the same circle as far as possible.

Notes:

- **Note-1:** Tighten all the bolts required for assembling the protection enclosures like devices of the reactor and apply stopping glue on the threads to prevent looseness.
- **Note-2:** The construction personnel are not allowed to step on the outgoing ling connector at the side of the reactor spider when installing the reactor proper and associated devices, or else, the conductors will be at the risk of breakage, which will shorten the operation life of the rector and even result in acidents.
- **Note-3:** Rainproof and waterproof measures shall be taken for storing the noise enclosures with sound-absorbing cotton.
- **Note-4:** Remember not to scrape or damage the components' surfaces with protective coating during the installation.

14.2.5- Checks after Completion of Installation

14.2.5.1- Check all bolts used for assembling the reactor for looseness.

14.2.5.2- The construction personnel shall check the tools to ensure that no fittings or other parts (such as bolts, nuts, or shims) are left on the reactor.

14.2.5.3- Check the reactor for cleanness to ensure that no foreign matters are attached to the reactor or left in the air ducts.

14.2.5.4- After the installation of the reactor, the lifting lugs on the spider of the coil shall be removed.

14.2.5.5- When the three phases of reactor are in horizontal arrangement, the centre-to-centre distances between the three phases shall be more than 1.7D (D refers to the outer diameter of the reactor winding). If the customer puts forth special requirements, the design can be performed accordingly.

14.2.5.6- No closed metal meshes shall exist within the affected areas all around the reactor so as to avoid additional loss. The fence for the reactor shall be open, and the distance between the fence and the center of the reactor shall be no less than 1.1D, and the space above and below the reactor shall be no less than 0.5D. In case of metal fence, the space above and below the reactor shall be 1.5D and 1.0D respectively. If the customer puts forth special requirements, the design can be performed accordingly.

14.2.6- Lifting of Reactor

If the reactor proper is less than 1.5 tons, vertical lifting can be used with the central lifting lug at the top of the reactor. For the reactor of more than 1.5 tons, the eyeholes on the spiders shall be used for lifting, and the angles between the independent lifting ropes shall be less than 60°. The reactor can not be lifted with the lateral fiberglass band between the aluminum rows of the frame, see Figure 15.

Prior to lifting, the fiberglass band of the coil shall be checked firstly, and in case of rupture thereof, lifting is not permitted in order to avoid danger. Only one coil can be lifted each time.

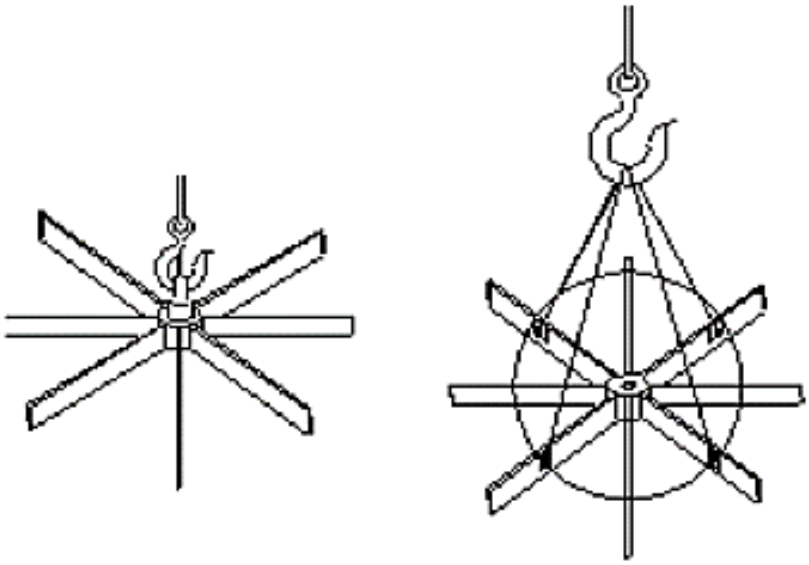

Figure 15: Lifting Method for Reactor

14.2.7- Wiring of Reactor (Cable Assembly**)**

14.2.7.1- Generally, the reactor has an upper and a lower outgoing line terminals, and the angle between the outgoing and incoming lines can be 0°, 90°, or 180° (refer to the outline drawing). The upper terminal is generally connected to the HV incoming lines and the lower terminal to the LV outgoing lines.

14.2.7.2- For three-phase reactors in vertical arrangement, the winding of the middle phase is wound in reverse direction. For Reactors with two phases in vertical arrangement and one phase in horizontal arrangement, the lower one of the two phases in vertical arrangement is wound in reverse direction. During installation, attention shall be paid to the angles between the outgoing lines of different phases. The incoming lines can be connected to the upper terminals or the lower terminals uniformly. The outgoing lines and incoming lines cannot be reversely connected for phases in vertical arrangement.

14.2.7.3- The surface of the aluminum conductive terminal shall be flat and smooth, and dirt on the surface of the connecting terminal shall be removed. The terminal shall be fastened with bolts. It is recommended to apply conductive paste on the contact surface of the terminals.

14.2.8- Storage of Reactor

14.2.8.1- **Temporary Storage:** If the reactor will not be installed immediately upon the arrival, the package shall not be removed. Instead, the packing case of the reactor shall be stored in the place for temporary storage, which shall be clean and free of aggressive gas, and can provide protection against water, mud and dust. The packing cases shall be arranged orderly and steadily, and can be elevated if necessary.

14.2.8.2- **Long Term Storage:** If items need to be stored for a long time (such as spare parts), the packing cases shall be protected properly. They shall be stored in indoor or semi-indoor environment in accordance with Section 8.1 so as to avoid rain or moisture.

14.3- Instruction for Commissioning

14.3.1- Commissioning of Adjustable Reactor with Upper and Lower Coils

In the adjustable reactor with upper and lower coils, the total inductance of the two coils can be adjusted through changing mutual inductance of the upper and lower coils by adjusting the distance therebetween as shown in **Figure 16**. The distance between the upper and lower coils is determined by the positions of bolts on the conductive supporting plates and the positions of nuts on the screw rods. Each conductive supporting plate is provided with two rows of circular holes with identification numbers as shown in Figure 17. As required by mutual inductance, the numbered circular holes must match with the diameters of flange holes on the lower spider of the upper coil. The slot holes on the conductive supporting plates shall be connected to the flange holes on the upper spider of the lower coil. The detailed diagram for the conductive supporting plates is shown in Figure 17.

The inductance nameplate shown in **Figure 17** provides the numbers of the two lines of holes and the matching inductance values. The pattern of hole number is “a-x”.

The meaning of “a-x”: “a” is a number (such as 6, 7) on the conductive plates for the slot holes which are provided for continuous adjustment of distance and mutual inductance; **“x”** is also a number (such as 1, 2, 3, 4) on the conductive plates. The desired inductance for reactor can be obtained by adjusting the reactor through selecting appropriate tap combinations.

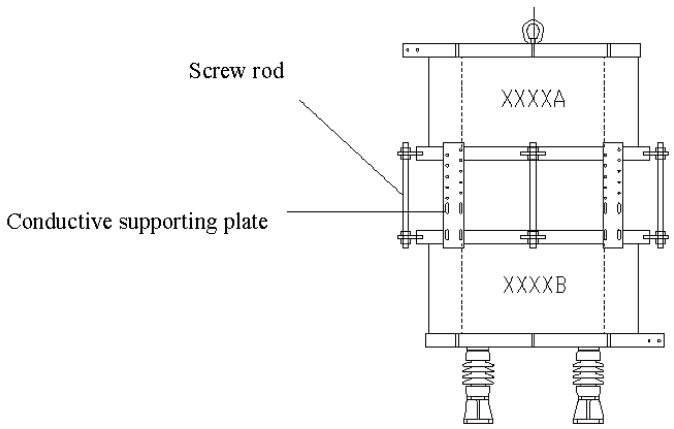

Figure 16: Adjustable Reactor with Upper and Lower Coils

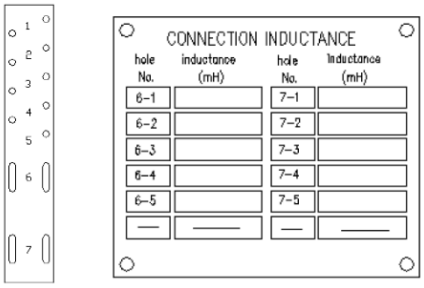

Figure 17: Conductive Supporting Plate and Inductance Nameplate

14.3.2- Commissioning of Adjustable Reactor with Main and Auxiliary Coils

The reactor consists of one main coil and one auxiliary coil. The auxiliary coil is positioned outside the main coil (in some structures the auxiliary coil is positioned above the main coil.). The auxiliary coil is provided with a lot of tap boards as required.

The main coil and the auxiliary coil are connected through connection board. The lower end of the vertical conductive plate is fixed with bolts to the outer side of the lower spider of the coil. The selected tap board is connected to the vertical connecting plate with the L-shaped connecter. The position or height of the **"L"** -shaped connecter on the vertical connecting plate can be optionally adjusted or changed depending on the tap's position requirement or the height of the connecting plate. Refer to **Figure 18**. The vertical connecting plate is provided with slot holes as shown in **Figure 20**.

If the tap board is located between the two spiders rather than in alignment therewith, a horizontal connecting plated is required. The horizontal connecting plate is installed at an appropriate location on the end flange of the lower spider, either on the left side or right side. **See Figure 20**. If the selected tap is located just above a spider, the horizontal connecting plate shall be removed and the vertical longitudinal connecting plate shall be directly installed on the outside of the spider

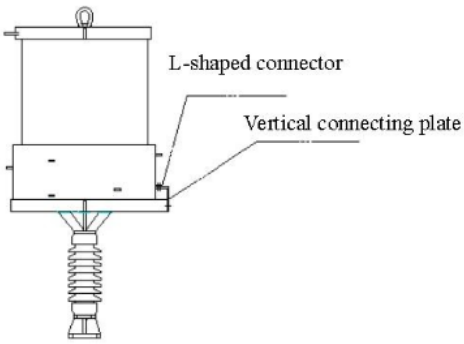

Figure 18: Adjustable Filter Reactor with Taps

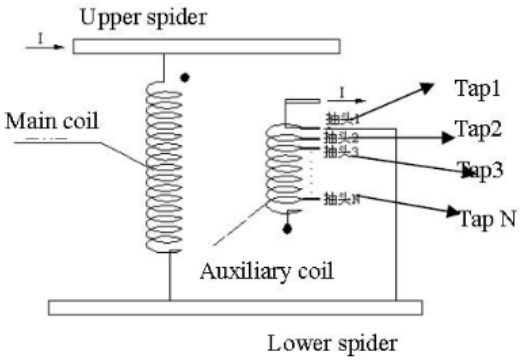

Figure 19: Wiring Diagram of Main Coil and Auxiliary Coil

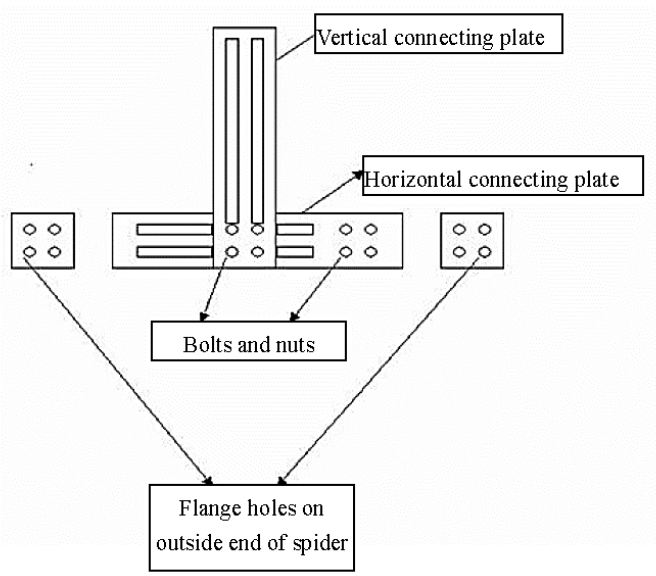

Figure 20: Installation Diagram of Connecting Plates

Different inductance values will be obtained by connecting different taps to the lower spider through the conductive plate. The tap inductance nameplate shows the total inductance values between the high voltage and low voltage terminals. To obtain a required inductance value, a tap can be selected to connect to the lower spider by reference to the tap inductance nameplate. The tap inductance nameplate is attached on the end of the spider, listing all inductance values for inner connections as shown in **Figure 21**.

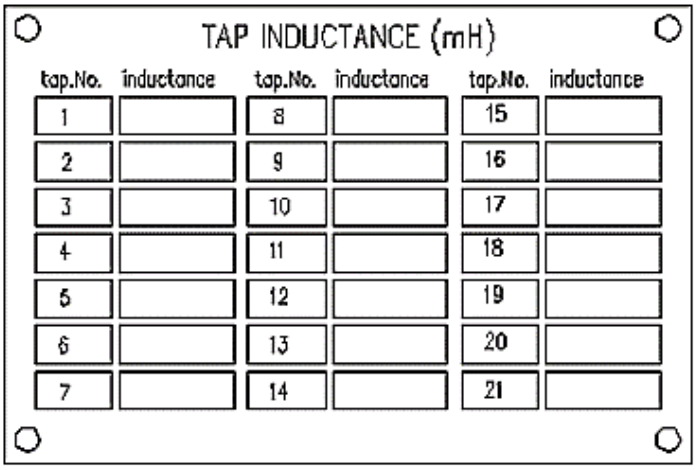

Figure 21: Diagram of Tap Inductance Nameplate

14.4- On-site Tests

14.4.1- Measurement of DC Resistance

When measuring DC resistance, it is preferable to select DC Kelvin Bridge. While measuring, keep the balance between the temperature of reactor winding and ambient temperature. Based on the current temperature t, convert the resistance Rt to Rtr under reference temperature tr (**such as 75°C**).

The conversion equation is: Rtr = ((255 + tr) / (255 + t)) × Rt

Note: For three-phase reactors in vertical arrangement, because mutual inductance between phases is introduced in its design and the number of turns for each winding is different from each other, therefore, the DC resistances of three phases are different.

14.4.2- Measurement of Power Frequency Inductance

The impedance can be measured by using voltammetry. In this method three-phase AC power supply shall be used since the AC resistance is very small compared with the impedance and can be omitted. However, for single-phase reactor in horizontal arrangement, such as a filter reactor used in HV DC converter station, a single-phase power supply can be used for measuring the impedance and inductance.

14.5- Operating Information

1. **Operation location:** outdoor or indoor.
2. **Ambient temperature:** -40oC to +40oC or -25oC to +45oC (or designated by clients).
3. **Altitude:** ≤ 1,000 m
4. **Maximum wind speed:** 35 m/s
5. **Relative humidity:** ≤ 90%
6. **Anti-seismic design:** as requested by clients.
7. For indoor application, ventilation and cooling measures must be taken.
8. The installation location shall be clean without any harmful gas, steam or conductive or explosive substances.

Note: If any special requirement on operation conditions, please contact BPEG.

14.6- Maintenance

14.6.1- General

Periodic inspection and maintenance of the reactor shall be conducted to ensure long term reliable operation. The interval for inspection & Maintenance depends on the rated parameter, capacity, operating load and on-site environmental conditions. Annual routine inspection shall be performed for large-power reactors, particularly the thyristor controlled shunt reactor, load flow control reactor of the transmission system and HVDC smoothing reactor. Routine inspection at the interval of five years is enough for other reactors (such as current-limiting reactor, filter reactor and damping reactor) which are installed under the general polluted environment. Annual inspection is recommended for the reactors installed under severe environments. Additional inspection will be recommended for the reactor which suffered the harsher operation or environmental conditions. The reactor shall be inspected immediately after suffering from short-circuit current. Particularly, the reactor support

structure shall be inspected and tested after suffering from relatively serious earthquake. When performing the inspection, the reactor shall be de-energized and earthed safely, and when necessary the reactor top can be inspected with the help of a ladder.

14.6.2- Routine Inspection or the Maintenance Interval

14.6.2.1- **One year:**

This maintenance interval is recommended by the manufacturer for any reactors installed under the relatively poor environmental conditions. The severity of on-site environment may be evaluated with reference to IEC 608l5-l986 ***Guideline for Selecting Insulators under the Polluted Conditions*.** The inspection interval of one year also applies to the shunt reactor, thyristor controlled shunt reactor, load flow control reactor of the transmission system and smoothing reactor (regardless of the on-site environment).

14.6.2.2- **Five year:**

This inspection interval (applicable to the products installed under the general environmental conditions) is recommended for the current-limiting reactor, neutral grounding reactor, filter reactor, damping reactor and series reactor used for the electric arc furnace.

14.6.3- Routine Inspection or Maintenance Items (with Interval of One Year or Five Years)

14.6.3.1- Check the product visually for completeness;

14.6.3.2- Check the connection between the top & bottom supports and windings for the looseness and the outgoing line for damage and welding connection for poor contact respectively;

14.6.3.3- Check the support and banding tape for looseness;

14.6.3.4- Check the reactor connector and busbar for poor contact and treat the surface and tighten the bolts when necessary.

14.6.3.5- Check the mounting bolts of the reactor and the bolts of the rainproof cap and rainproof grid for looseness and tighten them in a timely manner when necessary.

14.6.3.6- Check the top & bottom surfaces of the windings for carbonization and discharge trace. In case of the above abnormal conditions, notify BPEG in a timely manner;

14.6.3.7- Check the insulating paint of the reactor surface for damage or peeling off and if any, make remedies in a timely manner. Check the reactor installed in relatively severe environment immediately after it suffered from serious pollution, and if any black creepage trace is found, notify BPEG before the reactor is re-energized. Maintenance is recommended for the reactor surface after 10-15 years of operation under normal environmental conditions. Reapply the protective coating on the reactor surface. Please contact BPEG for the operation instructions;

14.6.3.8- Check the winding top and air duct for impurities (particularly bird nests) and remove them;

14.6.3.9- Check the bolts of the support structure for looseness, and if many bolts are found to be loose, tighten all the bolts again;

14.6.3.10- Check the grounding wire of equipment for reliable connection (whether bolts are tightened and corrosion occurs);

14.6.3.11- Periodically clear up the internal & external surfaces of the reactor and the insulator surface and clean the reactor and insulator as per 8.4 when necessary;

14.6.3.12- Before energization, please remove all substances (tool, bolt, metal piece and oilcloth) irrelative to the operation of product.

14.6.3.13- Periodically measure the DC resistance and power frequency reactance of the reactor and the measurements shall be basically consistent.

14.6.4- Cleaning of Reactor

In general, cleaning is not required for reactors installed under normal environmental conditions. However, if cleaning is to be carried out for the insulators installed in the specific site, it is also recommended for the reactor. The cleaning intervals thereof shall be the same. The reactor installed under the heavily polluted environment shall be cleaned regularly according to the actual conditions. If serious industrial pollution occurs due to the production accident, the reactor shall be cleaned immediately. It is recommended by BPEG to clean the reactor by wiping or blowing with compressed air (if possible) rather washing directly with water.

Notes:

- **Note-1:** If the reactor surface is applied with RTV coating, it can not be cleaned with detergents. Cleaning the surfaces of the reactor and insulator with water-wetted cloth in sunny days is preferred.
- **Note-2:** The water used for cleaning the reactor shall be absolutely clean.
- **Note-3:** After the cleaning, the reactor can only be reenergized when it is completely dried.
- **Note-4:** The minimum drying time depends on the environmental temperatures and generally 12 hours is enough.

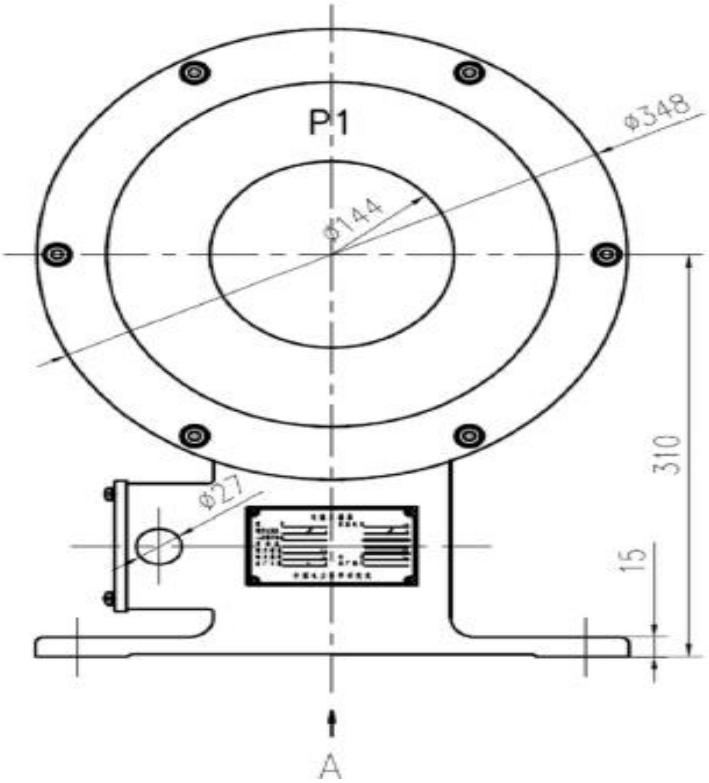

15- FSC TOROİD CT MANUAL

15.1- Toroid Current Transformer (CT) Product description

LMZP-3.6-2 type bus current transformer is applicable for the high voltage platform of series compensation of 1000kV AC transmission line. The product performance indicators are in line with the requirements of national standards **GB12082006 "CT "**.

The product has following characteristics:

- high measurement accuracy
- excellent protective performance
- Dry-type, small volume, light weight and free of maintenance
- Strong electromagnetic interference resistance with a metal shielding shell
- Stable performance of main insulation material and reliable operation
- Bus-type with a reserved bus perforation diameter of not less than 280mm

15.2- Environmental Operating Conditions

- **Elevation:** Generally not more than 1000m.
- **Ambient temperature:** Between + 40°C of highest and - 40°C of lowest.
- **Air conditions:** no heavy polluted and acid corrosive medium.

15.3- Model (Type) Description

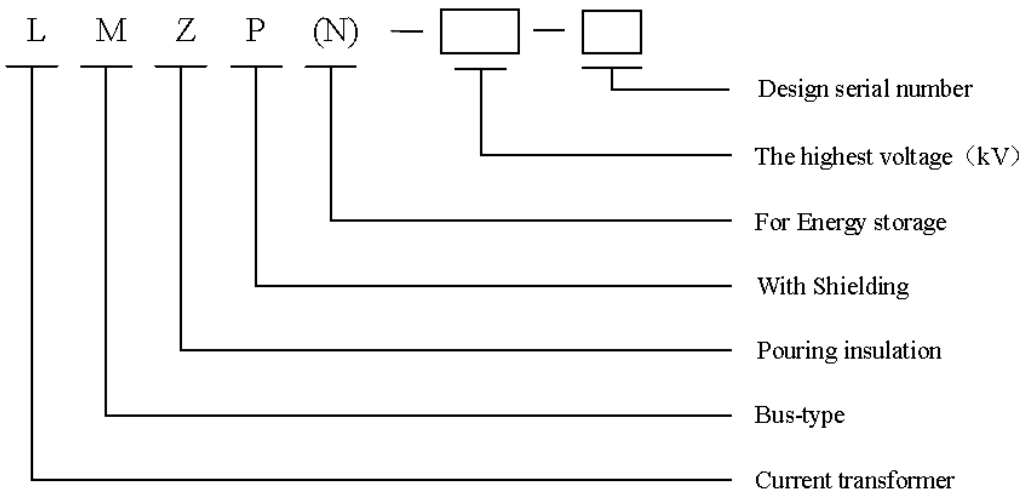

Figure 1: Model description

15.4- Toroid CT Structure

The current transformer is an outdoor device with a whole structure of bus-type, mainly by pouring insulation and second winding.

The second winding is disposed in the shielding shell and integrally cast together. There is a second wiring box at the bottom of the transformer. The first wiring (bus) penetrate through the hole in the middle with a reserved bus perforation diameter of not less than 280mm.

The terminal sign of outgoing line can be seen in **Figure 2**.

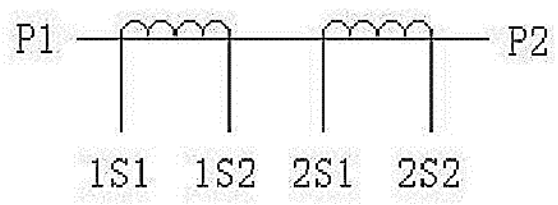

Figure 2: Terminal sign of outgoing line

- **P1, P2:** terminal of the first wiring (bus);
- **1S1, 1S2:** terminal of the second outgoing wiring;
- **2S1, 2S2:** Terminal of the second outgoing line of second wiring;
- P1 and S1 have the same polarity at the same moment;
- The sign of terminals take the actual sign as standard.

15.5- Main Performance Indicators of Toroid CT

Main performance indicators can be found in the following **Table 1**.

Type		LMZP（N）-3.6-2
Ceiling voltage	kVrms	3.6
Rated impulse withstand voltage	kVpeak	60
Rated frequency	Hz	50 or 60
Rated first current	A	1000～3000
Rated second current	A	1
Number of iron core		2
Rated output	VA	2.5/5/10～100
Accuracy class		0.2/5P
Accuracy limit factor		10～40
Reserved bus perforation diameter	mm	144
Weight	kg	48
Applicable bus bar diameter	mm	≤130

Table 1: Main performance indicators

15.6- Appearance and Installation dimensions

The appearance and installation dimensions can be seen in **Figure 3**

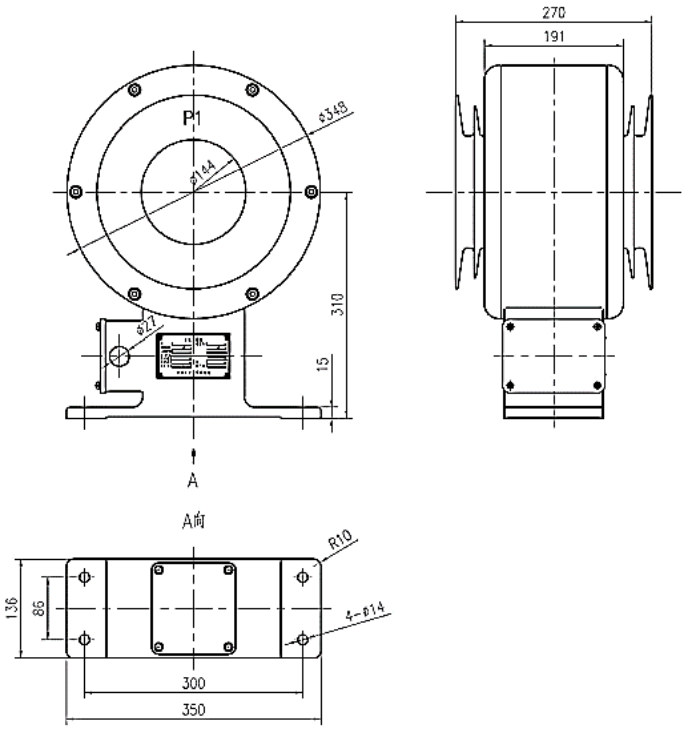

Figure 3: The appearance of LMZP-3.6-2-type current transformer of series compensation

15.7- Installation, Operation and Maintenance Notes

15.7.1- Inspections before installation

- When the product arrives, please check the package first. Then remove the package to confirm shipping list and accessories and check the configuration to ensure no damage or collision. In case of damage, please contact the supplier as soon as possible.
- Before installation, please check whether the product models, specifications are in line with the ordering contract, to ensure that all the documents are complete. Please carry out the routine inspection before installation and operation. If any problems, please contact the supplier in time.

15.7.2- Installation and Operation

- When lifting and moving the products, please remove the insulating sheath firstly and hoist with soft sling (**as shown in Figure 4**).Avoid severe vibration and shock; please pay attention not to let collision and friction occur to the shell and the insulating jacket; keep the transformer shell and insulating sleeve surface intact and avoid breakage.

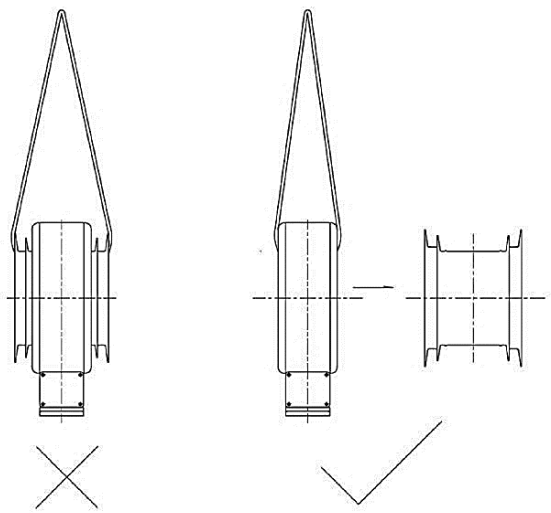

Figure 4: Hoisting of current transformer

- Prohibiting loosening the sealing bolts;
- The transformer base should be horizontal installed, inclined or inverted installation is strictly prohibited;
- During installation, please screw the terminals and base mounting bolt, to ensure that the installation is firm; After installation, the insulating protective sleeve is sheathed in the inner hole of transformer;
- The bus should penetrate through the middle of reserved window with the tube diameter and bus width not more than 250mm; *during penetrating, collision and friction are prohibited and the insulating sleeve surface should keep intact, avoiding breakage;*
- *After installation, the nearest distance between bus and insulating sleeve should be more than 10mm;*
- *The second circuit in the operation is strictly forbidden to open, otherwise it will generate high voltage and endanger the operation personnel and equipment safety*.

15.7.3- Maintenance and storage

As the structure of product is simple and the main insulation material for outdoor use is made of silicone rubber with stable performance, therefore, no need for special Maintenance in operation. When maintain with other equipment, dust cleaning is enough or carry out preventive test.

Please cover the product with a plastic bag or other protective cover when storing the products before installation in a storehouse with **ambient temperature of -20° C to +30° C**. Avoiding acid, alkali or other harmful material in the air.

15.7.4- After-sale service

Suppose the users comply with the rules of storage, installation and operation, if the product doesn't work properly or damage during operation due to poor quality within 12 months from the date of installation and within **18 months** from the date of shipment, we will replace and repair the products for free for our users.

15.8- Factory Documents

The documents include:

- Packing list
- Certification
- Routine test report
- Installation and usage manual

Factory documents should be perfectly packed and avoid damp.

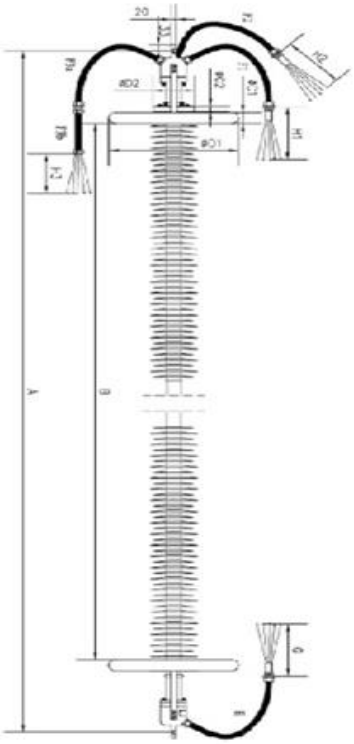

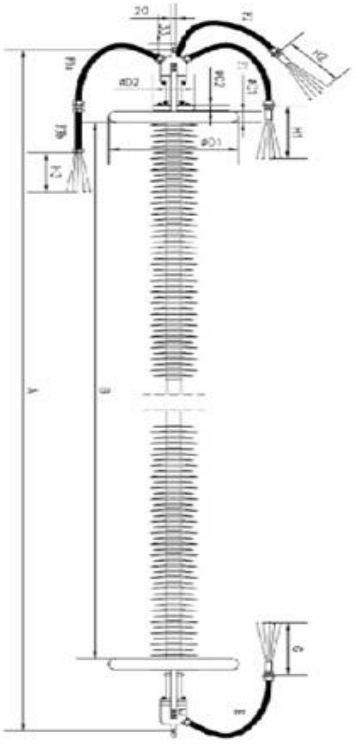

16- FSC OPTICAL FIBER COLUMN MANUAL

16.1- Usage of Optical Fiber Column

Optical fiber column for series compensation device (also called optical fiber signal column) is fixed beneath the compensation platform and send the control signal from ground to relative position on the platform and the test signal from the platform to the control cabinet on the ground. It can also send the optical energy from ground to high-voltage platform. The column works as a pathway transferring test information and energy between the ground and high-voltage platform.

16.2- Environmental Operating Conditions

- The ambient temperature should neither be higher than +40°C, nor less than -40°C;
- The altitude less than 1000m;
- No heavy pollution in the air.

16.3- Model (Type) Description

The English letters and numbers represent meanings shown as below:

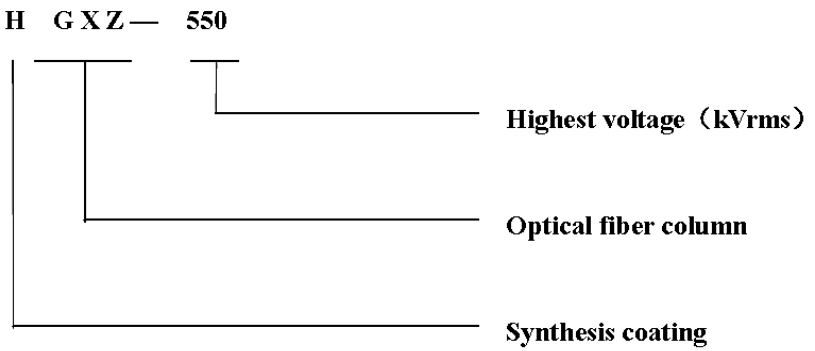

Figure 1: Model description

16.4- Main Technical Indicators

Main technical indicators seen in below **Table 1**

Rated voltage U_r(kV)	Nominal system voltage U_n(kV)	60s frequency withstand voltage U_d(kV)	switching impulse withstand voltage U_s (kV)		full lightning impulse withstand voltage U_f (kV)	creepage distance no less than (mm)
		Humidity withstand	Dry withstand	Humidity withstand		
550	500	790	1300	1300	1800	13750

Table 1: Main technical indicators

16.5- Configuration and Installation Dimensions

- The configuration seen in **Figure 1**;
- The installation dimensions of head seen in **Figure 2**;
- The relative dimensions in Figure 1 can be found in below **Table 2**.

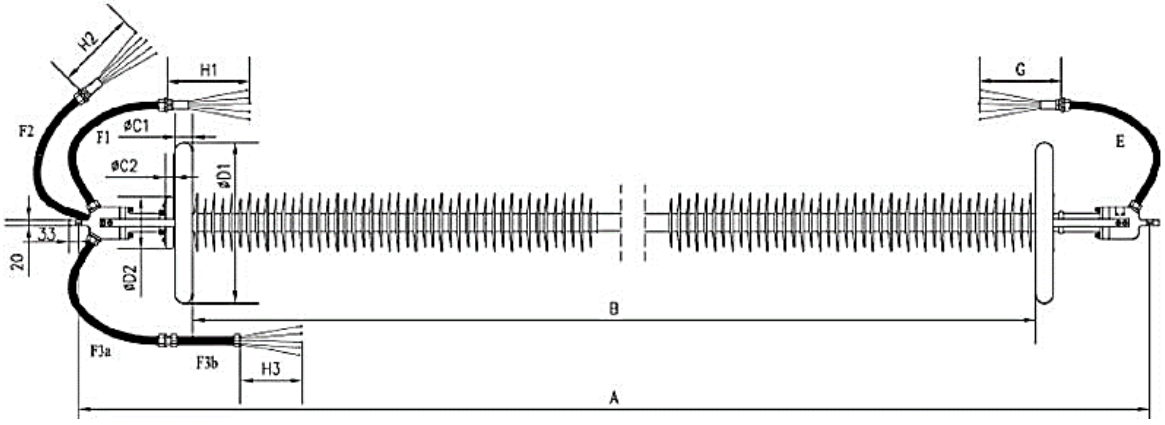

Figure 2: Configuration of optical fiber column

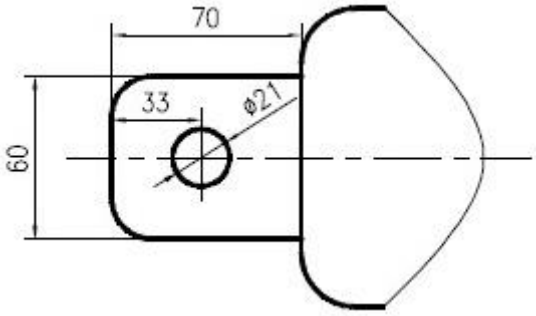

Figure 3: installation dimensions of head

No.	Code		Code description	value	unit	tolerance
1	A		Length of installation pole	5730	mm	±20
2	B		insulation net distance	4950	mm	±50
3	C1		large grading ring diameter	60	mm	nom
4	C2		Small grading ring diameter	30	mm	nom
5	D1		large grading ring outer diameter	550	mm	nom
6	D2		Small grading ring outer diameter	180	mm	nom
7	E		Length of bellow (ground-side)	2.7	m	nom
8	F1、F2		Length of bellows to the platform measure case (high voltage-side)	2.2	m	nom
9	F3	F3a	length of bellows to gap control case (high voltage-side)	3	m	nom
		F3b		3	m	nom
10	G		Length of tail fiber (ground-side)	1.5	m	nom
11	H1、H2		length of tail fiber to platform measure case (high voltage-side)	1.7	m	nom
12	H3		length of tail fiber to gap control case (high voltage-side)	1.5	m	nom

Table 2: Dimensions the codes refer in Figure 1

Note: Dimensions in the table for reference and the real dimensions taking the optical fiber column technical agreement as prevail.

16.6- Installation and Acceptance

16.6.1- Inspections before installation

When the product arrives, please check the package first. Then remove the package and check the configuration to ensure no damage or collision. In case of damage, please contact us in time.

Before installation, please check whether the product models and specifications are consistent with the ordering contract and the documents are complete or not. If not, please contact us as soon as possible.

16.6.2- Installation Steps

16.6.2.1- Installation of the large grading ring on the top flange

Support the top flange with a wood stick at a height of 400mm, put a large grading ring through the top flange shown in Fig.1, and fix the head and large grading ring with M8 bolt, shown in Figure 3.

Note: When put through, please don't remove the plastic bag which protect the ends of optical fiber column. Move the pigtail carefully without pulling or pressing hard to avoid damage to the pigtail and ends.

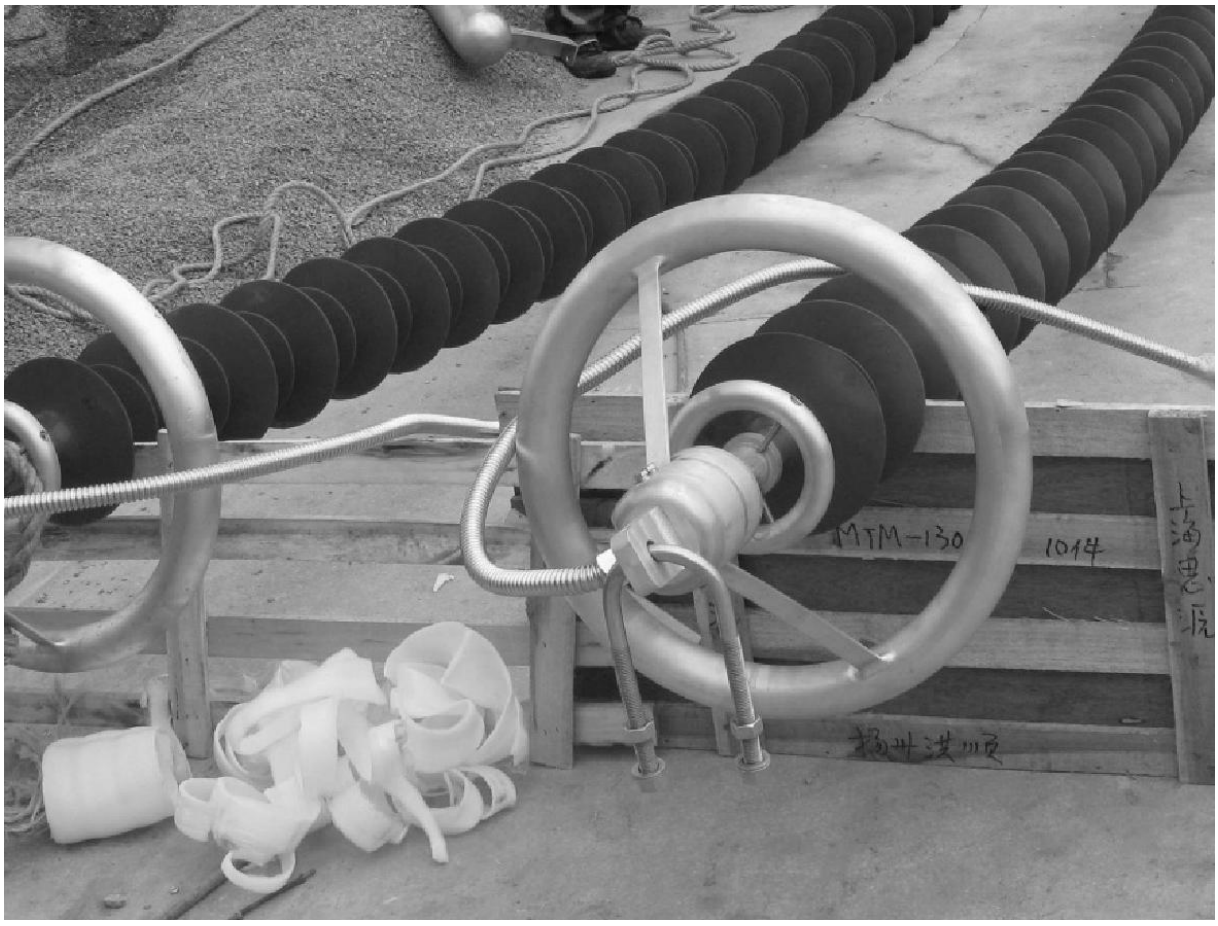

Figure 4: Fix the grading ring to the optical fiber column

16.6.2.2- Hoisting the optical fiber column

Make slipknot at the top flange and mid-column with two soft long ropes and hoist the up end of the column to the platform as well as the long soft sling fastening in the middle part. Keep the column straight (180 °) allowing the angle of bending less than 150°. (Seen in Figure 4).

Put the U ring through the Φ21 hole at the top flange and fix it to the corresponding installation hole at the platform with nut. Adjust the nut of the U type ring, so that the springs shorten 10cm~20cm.

Note: During hoisting, please don't remove the plastic bags which protect the ends of optical fiber column. Move the pigtail carefully without pulling or pressing hard to avoid damage to the pigtail.

16.6.2.3- Installation of large grading ring on the bottom flange

Put the large grading ring through the bottom flange as shown in Figure1 and screw the ring and head with the M8 bolt.

Note: When put through, please don't remove the plastic bag which protect the ends of optical fiber column. Move the pigtail carefully without pulling or pressing hard to avoid damage to the pigtail and ends.

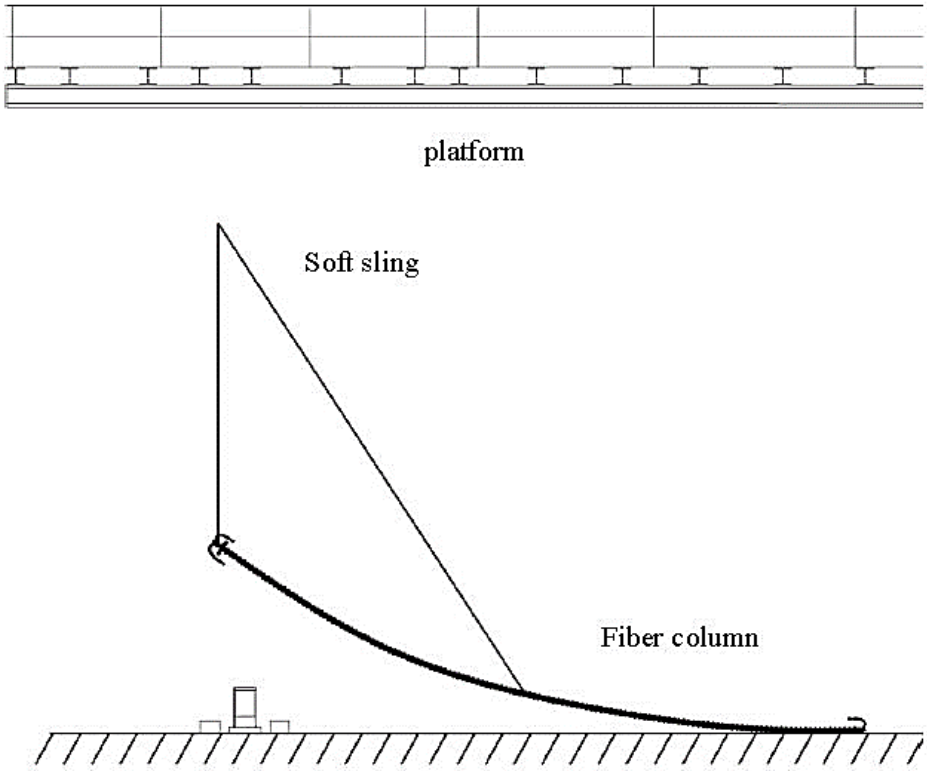

Figure 5: Hoisting diagram

16.7- Preservation

Long term products run without installation, should be kept at an ambient temperature of -10°C~ +30 °C, relative humidity of not more than 70%, the air around the acid-base and other harmful impurities in the warehouse. When the products are out of operating for long term, it should be kept in the warehouse with ambient temperature of -10°C~ +30 °C,relative humidity of no more than 70%, and no acid-base air and other harmful impurities.

16.8- Inspection and Maintenance

The products' appearance should be regularly checked on normal operation, including the insulation umbrella skirt and related connection bolts, etc. Downward pull should be checked regularly to prevent too large or too small, otherwise it should be adjusted in time.

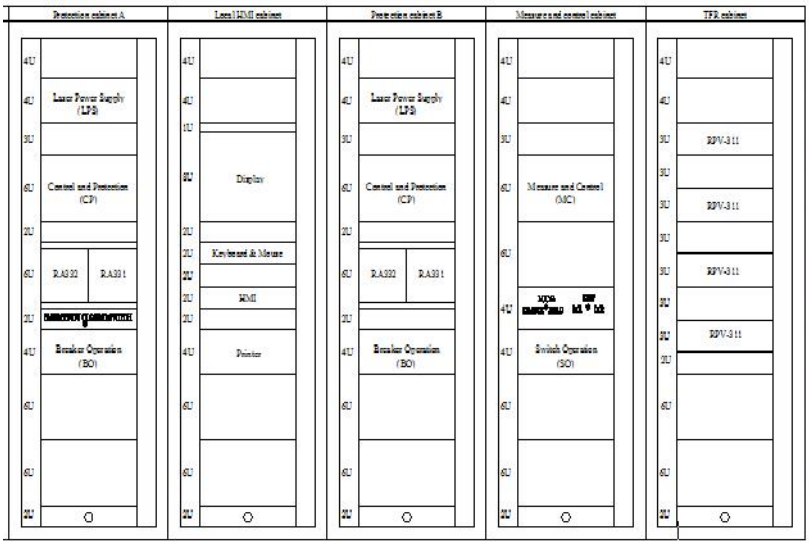

17- FSC CONTROL AND PROTECTİON SYSTEM MANUAL

17.1- General

Series compensation(abbreviation SC) in AC transmission system is to series connect the capacitors in the line, which can compensate the excessive inductance of long transmission lines, shorten electrical distance, increase the transmission capacity, improve the system stability and save investment. SC can be classify to Fixed Series Capacitor(**FSC**) and Thyristor Controlled Series Capacitor(**TCSC**).

TCSC can adjust the compensation resistor fast and continuously, suppress low-frequency oscillation and sub-synchronous resonance, further improve the system transient stability

17.1.1- Scope

This control and protection system manual is about FSC equipment of the China EPRI. If you have any questions about this manual, please contact with China EPRI to avoid misunderstanding. Users should follow in the structure of this manual. If conflicting with technical staffs' instruction, obey technical staffs' instruction.

Please read this manual **carefully** and thoroughly before operation and maintenance FSC control and protection system of China EPRI.

17.1.2- Abbreviate

- **C&P:** Control and Protection
- **M&C:** Measurement and Control
- **SC:** Series Compensation
- **FSC:** Fixed Series Compensation
- **SSR:** Sub-Synchronous Resonance
- **TFR:** Transient Fault Recorder

17.1.3- Function

FSC control and protection system can measure FSC electrical quantity, monitor FSC running state, send control command, protect the equipment, and etc…

This system can receive the commands from dispatch center or operator station, complete **"System-Level"** control, record system control command and events, with flexible control mode, friendly interface, and anti-jam ability.

This system function includes: communication with monitoring system, protection function, transient fault recorder(TFR), data playback function, measure and control function.

The function modules and the mode of connection with the monitoring system are showing as **Figure1**. The primary equipments of FSC and a part of measurement module are mounted on the platform, while others are installed on the ground. Use optical fiber to transmit data to meet the requirements of insulation between platform and ground. Protection system receives the data from the platform, send control and protection command according to the preset control and protection strategy. TFR module records analogy and logic channel data when faults occur and sends records to TFR substation for analysis. Measure and control system samples analog and logic data, controls the breaker and switches.

Control and protection system connects with the monitoring system, realizing data sampling and processiong, control operation, alarm processing, SOE (sequence of events), remote control function and human-machine interface.

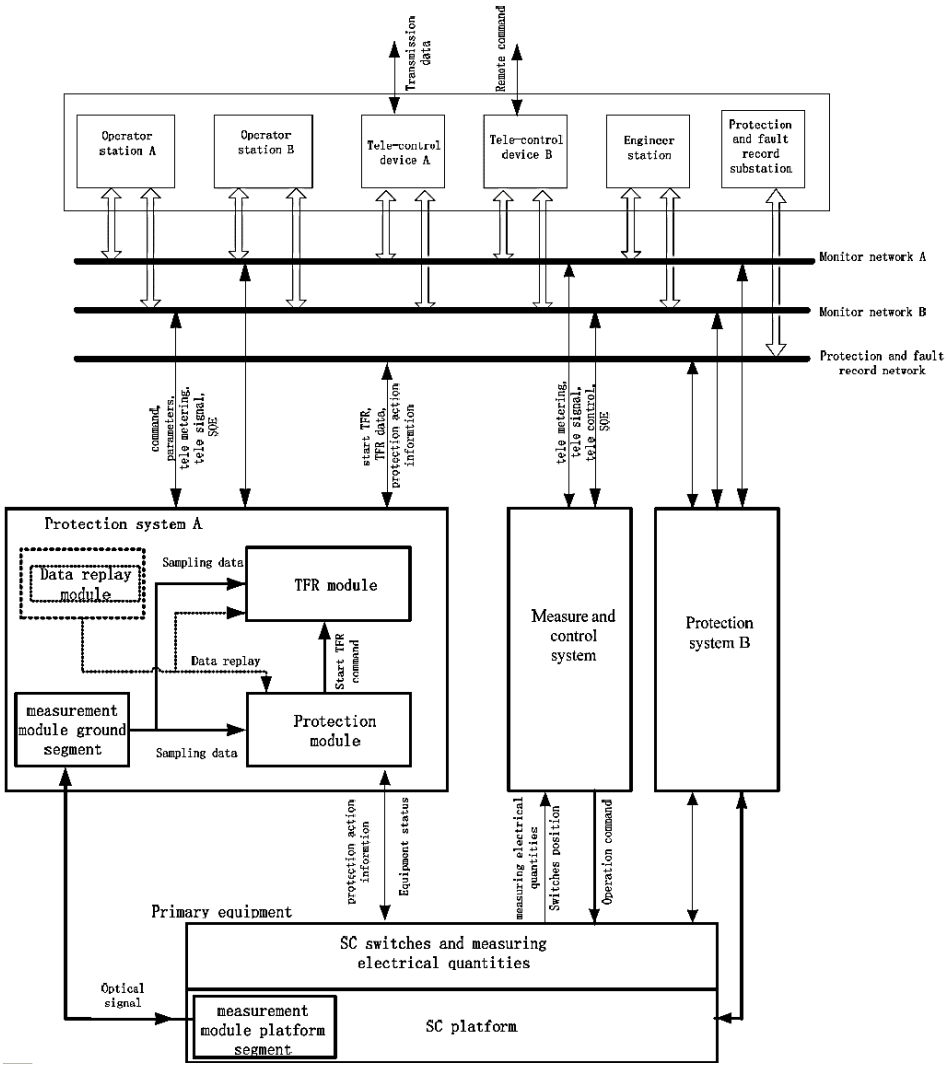

Figure 1: Control and protection system function module diagram

The main technical feathers of this system are:

1. Two dependent and redundent protection system with high reliablity.
2. Strong anti-electromagnetic interference ability, measurement modules able to adapt to strong electromagnetic interference environment on the platform.
3. Hierarchical, distributed architecture with clear framework. The layers are isolated from each other, which greatly simplify system design, improve system reliability and extension.
4. Variety communication interfaces, connecting to different automation system.
5. CAN bus and ethernet adopted to guarantee highspeed and reliable communication.
6. High speed DSP adopted as process kernal combined with high-speed data acquisition channels to achieve real-time calculation of the data.

17.1.4- System configuration

This control and protection system realizes the dependence of control and protection. To improve protection reliability, two dependent and redundant protection systems are adopted. When one set is out of operation because of faults or maintenance, another set can continue to work.

The connection of C&P system and M&C system is as **Figure 2** showing. **The C&P system connects with operator station, engineer station, TFR substation and telecontrol system.** Two dependent and redundant protection system are adopted, each of which are connected to dual-monitor and control network, network A and network B. The M&C system is connected to these dual-networks too.

Protection system and M&C system communicate with substation level devices through dual monitor and control network and TFR network. Protection system sends protection action information through monitor and control network A and B, in the mean time send TFR file through TFR network. In substation level, operator station A and B, remote station A and B, engineer station get data from monitor and control network. TFR substation gets data from TFR network. Operator station A and B send command to protection system and M&C system from monitor and control network. Remote station transfers command of remote control center to protection system and M&C system from monitor and control network

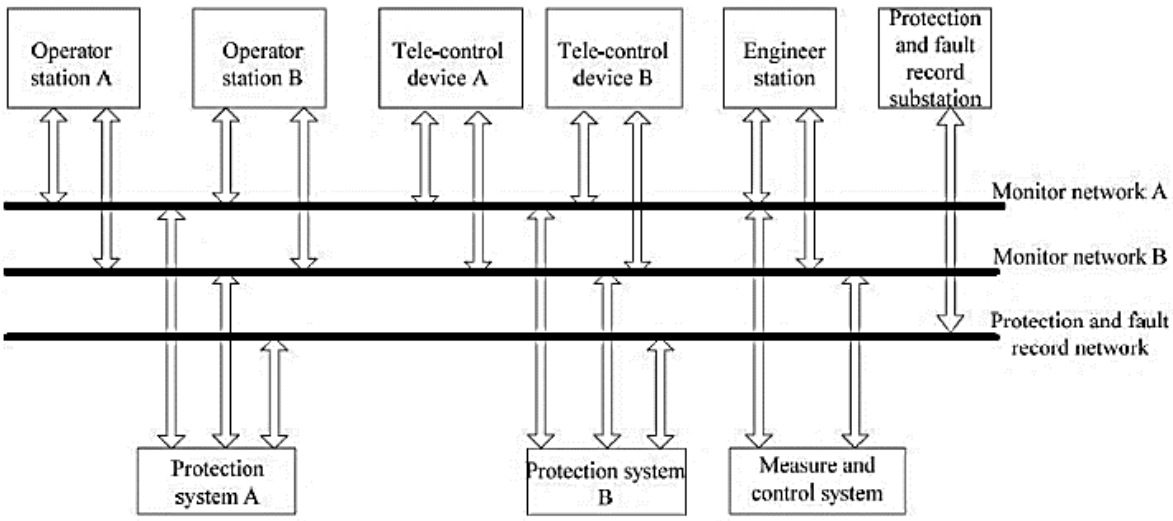

Figure 2: Connection digram of C&P system and M&C system

The function diagram of to C&P system is as:

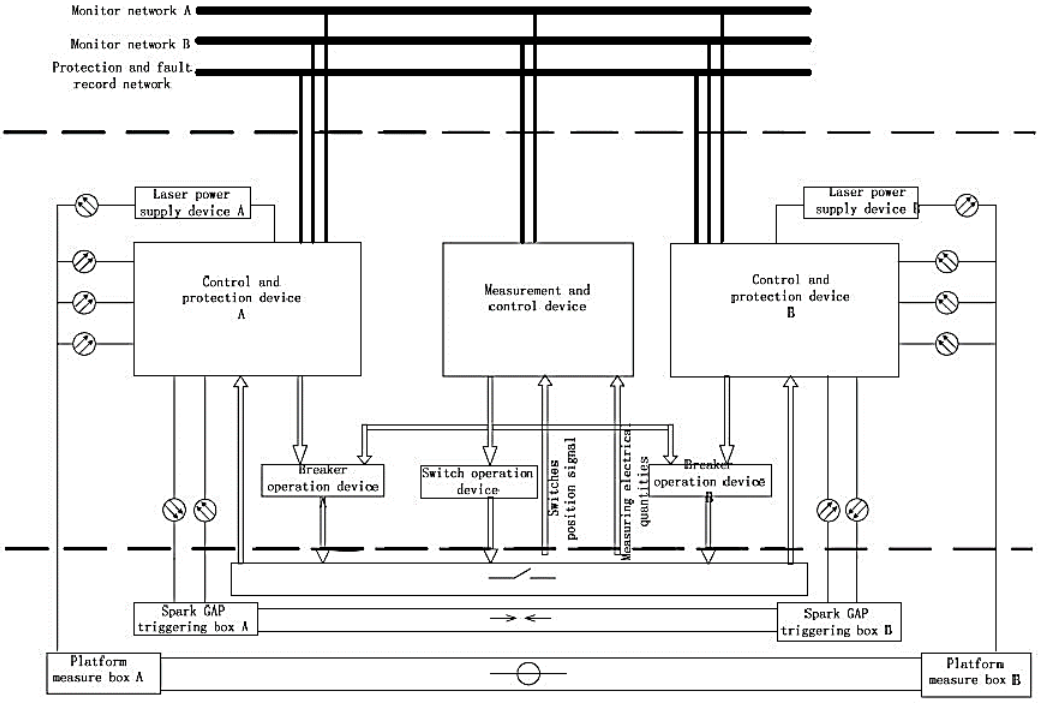

Figure 3: The function diagram of to C&P system

C&P devices receive electrical data sampled by platform measure box, monitor IO channels, complete protection algorithm, and send protection command when system or equipment faults occurs.

M&C devices sample electrical quantity and acquire IO channels information, control SC breaker and switches. Breaker operation device transfers commands from protection devices and M&C device to breakers. Switch operation device transfers commands from M&C device to switches. Laser supply devices can supply power to platform measure box in the case of maintenance or no load mode.

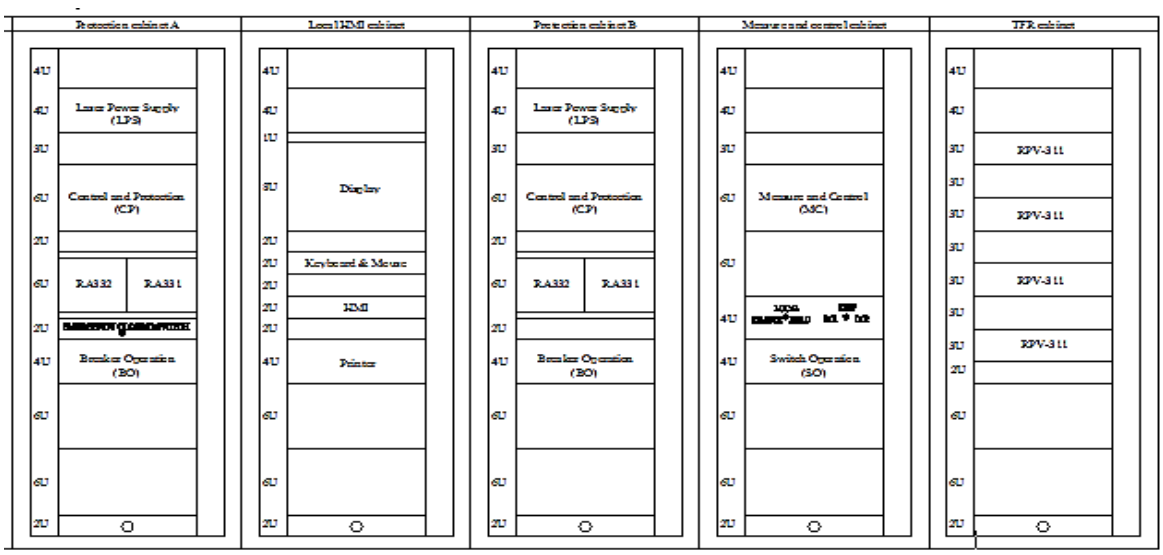

Figure 4: Tipik C&P sistem panolarının düzeni

Note: In Kayseri Capacitor Bank Project, Cabinets in the order, respectively; CPA, CPB, MC, TFR and HMI cabinets

- There are five cabinets in relay room: **protection cabinet A and B**, **HMI cabinet**, **measure and control cabinet**, **TFR cabinet**.
- Protection cabinet A and B are duplicate and redundant sets, which will improve the reliability of protection system.
- FSC protection cabinet mainly includes laser power supply device, C&P device, breaker operation device.
- HMI cabinet mainly includes LCD monitor, HMI communication management device, printer, keyboard and etc.
- M&C cabinet mainly includes M&C device, switch operation device.
- TFR cabinet includes mainly includes LCD monitor, TFR HMI communication management device, printer, keyboard and etc.

17.1.5- Technical Indicators

17.1.5.1- Basic Indicators

1- Power Supply:

- **DC:** 220V or 110V. Allowable variation range 80%～115%.
- **AC:** 220V. Allowable variation range 80%～115%, 50Hz/60Hz.
- **Platform measure box power supply:** CT power supply and laser power supply as mutual backup power supply.

2- Working Environment:

- **Indoor equipment operating temperature**: -10 ℃ ～ 55 ℃.
- **Outdoor equipment operating temperature**: -40 ℃ ～ 70 ℃.
- **Relative humidity:** % 5 ~% 95
- **Adjustments can be made according to special requirements.**

3- Performance of TFR in C&P system:

- **The length of recording time:** 300 cycles (maximize).
- **Sampling frequency:** 128 points per cycle (power frequency is 6).
- **Pre-recording time:** 25 cycles.

4- Communication with monitoring system:

- **Communication network:** Ethernet.
- **Protocol:** IEC60870-5-101, IEC60870-5-103, IEC60870-5-104 and etc.

5- Reliability index:

- **System availability:** ≥99.9%
- **Remote reliability rate:** ≥99.99%
- **Clock synchronization error:** <1ms (duaring timing period)
- **System availability rate:** ≥99.9
- **Tele-control reliability rate:** ≥99.99%
- **Time synchronize deviation:** <1ms (during a time calibration cycle)

6- Electromagnetic Compatibility:

- **Immunity to radiated electromagnetic field**

The device has passed high level radiated electromagnetic field immunity test specified by <GB/T 14598.9-2002> and <Q / GDW 330 — 2009 1000kV protection device and security automation device inspection and testing specification>.

- **Immunity to fast transient disturbance**

The device has passed high level fast transient disturbance test specified by《GB/T 14598.10-2007》and《Q / GDW 330 — 2009 1000kV1000kV protection device and security automation device inspection and testing specification》.

- **Immunity to fast transient pulses**

The device has passed high level fast transient pulses test specified by 《GB/T 14598.10-2007》and《Q / GDW 330 — 2009 1000kV1000kV protection device and security automation device inspection and testing specification》.

- **Immunity to electrostatic discharge**

The device has passed high level electrostatic discharge test specified by 《GB/T 14598.10-2007》and《Q / GDW 330 — 2009 1000kV1000kV protection device and security automation device inspection and testing specification》.

- **Immunity to surge**

The device has passed high level surge test specified by《GB/T 14598.10-2007》and《Q / GDW 330 — 2009 1000kV1000kV protection device and security automation device inspection and testing specification》.

- **Immunity to conducted disturbances induced by radio-frequency fields**

The device has passed high level conducted disturbances induced by radio-frequency fields test specified by《GB/T 14598.10-2007》and《Q / GDW 330 — 2009 1000kV1000kV protection device and security automation device inspection and testing specification》.

- **Immunity to the frequency magnetic field**

The device has passed high level frequency magnetic field test specified by《GB/T 14598.10-2007》and《Q / GDW 330 — 2009 1000kV1000kV protection device and security automation device inspection and testing specification》.

- **Immunity to Pulse magnetic field**

The device has passed high level pulse magnetic field test specified by 《GB/T 14598.10-2007》and《Q / GDW 330 — 2009 1000kV1000kV protection device and security automation device inspection and testing specification》

- **Immunity to damped oscillatory magnetic field**

The device has passed high level damped oscillatory magnetic field test specified by《GB/T 14598.10-2007》and《Q / GDW 330 — 2009 1000kV1000kV protection device and security automation device inspection and testing specification》

7- Mechanical Performance:

- **Vibration**

Device has passed the "GB / T 11287-2000" level 1 vibration response test specified in 17.3.2.1 and level 1 vibration endurance test specified in 17.3.2.2.

- **Shock**

Device through the "GB / T 14537-1993" severities specified in 17.4.2.1 is an impulse response test, and 17.4.2.2 specified severities as a shock endurance test. Device has passed the GB / T 14537-1993" level 1 impulse response test specified in 17.4.2.1 and level 1 shock endurance test specified in 17.4.2.2.

- **Collision**

Device has passed the "GB / T 14537-1993" level 1crash test specified in 17.4.3.

17.1.5.2- Protection Technical Specifications

Note: current setting value uses the secondary value. Ie is the secondary rating value, 1A or 5A.

1- MOV over-current protection

MOV over-current protection setting range is 1Ie～20Ie, which deviation is less than **±5.0%.**

MOV over-current protection operating time means: from the detection of MOV over-current protection operating, to the trigger signal sent to the GAP, the time does not exceed 1.5ms. From the detection of MOV over-current protection operating, to the bypass switch relay outlet closing, the time is no more than 30ms.

2- MOV Energy Protection

MOV energy low-setting protection setting range is 1000kJ ~ MOV allowed energy level. The deviation is less than **±5.0%**.

MOV energy high-setting protection setting range is 1000kJ ~ MOV allowed energy level. The deviation is less than **±5.0%**.

MOV energy protection operating time means: from the detection of MOV Energy protection operating, to the trigger signal sent to the GAP, the time does not exceed **1.5ms**. From the detection of MOV energy protection operating, to the bypass switch relay outlet closing, the time is no more than **30ms**.

3- MOV Temperature Protection

MOV temperature protection setting range is **50℃～200℃.** The deviation is less than **±5.0%.**

MOV temperature protection operating time means: from the detection of MOV temperature protection operating, to the trigger signal sent to the GAP, the time does not exceed 1.5ms. From the detection of MOV temperature protection operating, to the bypass breaker relay outlet closing, the time is no more than 30ms.

4- MOV unbalance protection

MOV unbalance protection setting range is **20%～50%.** The deviation is no more than **±5%** if MOV current is within **3Ie～10Ie.**

Delay for MOV unbalance protection means: from the detection of MOV temperature protection operating, to the trigger signal sent to the GAP, the time does not exceed 1.5ms if MOV unbalance protection setting is 1.2p.u. From the detection of MOV temperature protection operating, to the bypass breaker relay outlet closing, the time is no more than 30ms if MOV unbalance protection setting is 1.2p.u.

5- Line tripping FSC protection

The operation time is no more than 30ms.

6- Time for auto-reinserting FSC for line fault

Time for auto-reinserting SC for line fault means the time from the detection of closing bypass breaker relay outlet closing induced by line fault to opening bypass breaker relay outlet closing, which setting range is 200ms～3000ms and the deviation is **no more than ±1.0% or 40ms.**

7- GAP self-triggering protection

The operation time is no more than 100ms.

8- GAP refused triggering protection

The operation time is no more than 150ms.

9- GAP delay triggering protection

The operation time is no more than 150ms.

10- Capacitor unbalance protection

The setting **range of start-up value for unbalance protection** is 0.05Ie～2Ie. The deviation is no more than ±5.0%. The setting **range of start-up value for unbalance alarm** is 0.05Ie～2Ie. The deviation is no more than ±5.0%.

The setting range of **delay for capacitor unbalance alarm** is 100ms～5000ms. The deviation is no more than ±1.0% or 40ms if the capacitor unbalance alarm is 1.2Ie

The setting range for **capacitor unbalance low-setting protection** is 200μA/A～10000μA/A. The deviation is no more than ±5.0% if the capacitor current is above 0.2Ie. The setting range of delay for capacitor unbalance low-setting protection is within 1min～ 60min. The deviation is no more than ±1.0% if the capacitor unbalance low-setting is 1.2Ie.

The setting range for **capacitor unbalance high-setting protection** is within 0.2Ie～20I. The deviation is no more than ±5.0%. The setting range of delay for capacitor unbalance high-setting protection is 50ms～2000ms. The deviation is no more than ±1.0% or 40ms if the capacitor unbalance high-setting is 1.2Ie

11- Capacitor overload protection

The rated capacitor bank current setting range is **0.2Ie~2Ie**.

Delay for **capacitor overload alarm** setting range is **1s~60s**. The deviation is no more than **±1.0%** or **40ms** if the action current value is 1.2Ie.

- Time for re-inserting FSC for capacitor overload protection means: the time from the detection of closing bypass breaker relay outlet closing induced by capacitor overload to opening bypass breaker relay outlet closing, which setting range is **1min～120min** and the deviation is no more than **±1.0%.**
- **Time for re-inserting and resetting for capacitor overload protection means:** after the action of capacitor overload protection, waiting for the certain time interval, this protection action will not affect the times of allowed re-inserting for capacitor overload protection. The setting range is **1min～120min** and the deviation is no more than **±1.0%.**
- **Times of allowed re-inserting for capacitor overload protection means:** when the capacitor overload protection actions, if the times of capcitor overload protection action is equal or less than this setting value, then SC is allowed to re-insert; otherwise not allowed. The setting range is **0～5**.

12- SSR Protection

The setting range of SSR alarm is 0.05～0.30, the deviation is less than ±5%. **The setting range of delay for SSR alarm** is 100ms～10000ms.

The setting range of SSR protection is 0.05～0.30, the deviation is no more than ±5%. **The setting range of delay for SSR protection** is 100ms～10000ms.

- **Time for re-inserting and resetting for SSR protection means:** the time from the detection of closing bypass breaker relay outlet closing induced by SSR protection to opening bypass breaker relay outlet closing, which setting range is **1min～120min** and the deviation is no more than **±1.0%.**
- **Times of allowed auto-reinserting for SSR protection means:** after the action of SSR protection, waiting for the certain time interval, this protection action will not affect the times of allowed re-inserting for SSR protection. The setting range is **1min～120min** and the deviation is no more than **±1.0%.**
- **Times of allowed re-inserting for SSR protection means:** when the SSR protection actions, if the times of SSR protection action is equal or less than this setting value, then SC is allowed to re-insert; otherwise not allowed. The setting range is **0～5.**

13- Platform flashover protection

The action current setting range is 0.05Ie～20Ie. The deviation is no more than **±5.0%.** T**he delay time setting range** is 50ms～5000ms. The deviation is no more than ±1.0% or 40ms if the action current value is 1.2Ie.

14- BS phase disagreement protection

The **delay time** setting range is **200ms～10000ms.** The deviation is no more than **±1.0%** or **40ms**.

15- Bypass breaker fail-to-close protection

The delay time means: the time from the detection of closing bypass breaker relay outlet closing induced by other protection to bypass breaker fail-to-close protection tripping line relay outlet closing, which setting range is 200ms～3000ms and the deviation is no more than ±1.0% or 40ms.

16- Bypass breaker fail-to-open protection

The delay time means: the time from the detection of openning bypass breaker relay outlet closing induced by other protection to bypass breaker fail-to-open protection closing bypass breaker relay outlet closing, which setting range is 200ms～3000ms and the deviation is no more than ±1.0% or 40ms.

17- Line current monitoring alarm

The action current setting range is 0.2Ie～20Ie. The deviation is no more than ±5.0%. The delay time setting range is 100ms～10000ms. The deviation is no more than ±1.0% or 40ms if the action current value is 1.2Ie.

17.1.5.3- Measure and control technical specifications

17.1.5.3.1- AC power-frequency input

1- Nominal values:

- **Voltage:** 100/√3V, 100V;
- **Current:** 5A, 1A;
- **Frequency:** 50 Hz, 60 Hz.

2- Test accuracy:

- **Current, Voltage**: ±% 0,2;
- **Active power, Reactive power, Power factor:** ±% 0.5;
- **Frequency:** ±0.02Hz.

3- Influence quantity:

- The allowed deviation due to frequency fluctuation（45~55 Hz，54~66Hz）: ±0.2% for current and voltage, ±0.5% for power.
- The allowed deviation due to temperature change (-10℃~55℃): ±0.2% for current and voltage, ±0.5% for power.
- The allowed deviation due to harmonic content of measured quantity (20%): ±0.4% for current and voltage, ±1% for power.
- The allowed deviation due to measured quantity exceeding limits (120%): ±0.1% for current and voltage, ±0.25% for power.
- The allowed deviation due to self-heating (30min): ±0.2% for current and voltage, ±0.5% for power.
- The allowed deviation due to line unbalance: ±0.5% for power.
- The allowed deviation due to the interaction among measured line: ±0.1%
- The allowed deviation due to power factor change: ±0.2%.

17.1.5.3.2- Status indicator

Only consider state values linked to C&P system by passive relay contacts, which represent **"open"** or **"close"** state of BS.

- **Tele-signal responding rate:** 99.99%
- **Sequence of events (SOE) resolution:** ≤2ms.

17.2- Local Monitoring System

17.2.1- General

Local monitoring system can sample and process SC data(tele-signal, tele-metering),execute control command, and monitor FSC working state.SC provides ethernet interface, through which FSC is connected into existing substation monitoring system. Substation monitoring system transmits FSC working information to remote control center.

Following figure is the method of FSC being connected to substation monitoring system:

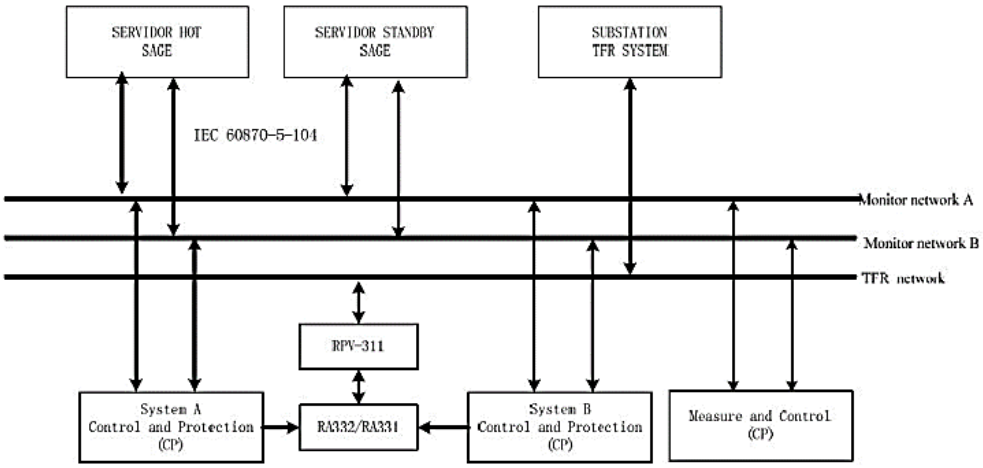

Figure 5: connection bitween FSC and substation monitoring system

17.2.2- Monitoring System Function Description

Local monitoring system provides the users an HMI, through which user can monitor FSC's working state real-timely, modify settings, check and analyse data and control FSC primary devices.

1. **Data sampling and processing (tele-signal, tele-metering):** receive, process and display FSC working state and electrial quantitue.
2. **Control operation (tele-control):** control switches, breakers and other equipments.
3. **Alarm:** set alarms if FSC's devices have abnormal phenomenon and faults, communication failures and etc.
4. **Sequence of events:** provide detailed and complete SOE information.
5. **Human-machine interface:** realize the function of operation, preview and print the report table, conform alarms, user management and etc.
6. **Mis-operation prevention and communication with other devices.**

17.2.3- Communication with Monitoring System

FSC protection and control system is connected into existing substation monitoring system in **IEC60870-5-104** protocol. According to user's demand, the information about FSC can be all sent out or partially sent out.

17.3- Protection Function

17.3.1- General

Protection function is implemented **by the control and protection device**.

The main function is as the following figure showing, including: according to the sampled electrical quantity and acquired status information, after calculation and procession, check the working status of FSC and the system. Based on the checking result, execute commands, such as open or close bypass breakers, trigger GAP, to isolate FSC devices rapidly and safely for the system safety and stability.

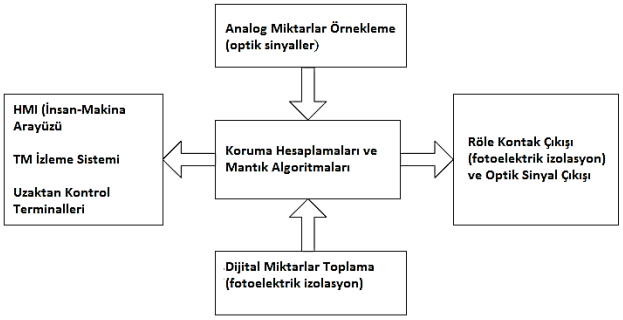

Figure 6: Protection function diagram

17.3.2- Protection function

17.3.2.1- Protection configuration

The protection configuration is as following table showing:

NO:	Koruma veya Alarm Fonksiyonu	Koruma Sonuçları
1	Kapasitör Aşırı-Yük Koruma	■ SOE ■ Kayıt ■ BS Kapatma ■ Kalıcı Kilit ■ Geçici Kilit □ GAP □ Hat Açma ■ LED ■ Uzaktan sinyal
2	Kapasitör Aşırı-Yük Alarmı	■ SOE ■ Kayıt □ BS Kapatma □ Kalıcı Kilit □ Geçici Kilit □ GAP □ Hat Açma ■ LED ■ Uzaktan sinyal
3	Kapasitör Dengesizlik Düşük-Ayar Koruması	■ SOE ■ Kayıt ■ BS Kapatma ■ Kalıcı Kilit □ Geçici Kilit □ GAP □ Hat Açma ■ LED ■ Uzaktan sinyal
4	Kapasitör Dengesizlik Yüksek-Ayar Koruması	■ SOE ■ Kayıt ■ BS Kapatma ■ Kalıcı Kilit □ Geçici Kilit □ GAP □ Hat Açma ■ LED ■ Uzaktan sinyal
5	Kapasitör Dengesizlik Alarmı	■ SOE ■ Kayıt □ BS Kapatma □ Kalıcı Kilit □ Geçici Kilit □ GAP □ Hat Açma ■ LED ■ Uzaktan sinyal
6	SSR Koruma	■ SOE ■ Kayıt ■ BS Kapatma ■ Kalıcı Kilit ■ Geçici Kilit □ GAP □ Hat Açma ■ LED ■ Uzaktan sinyal
7	SSR Alarmı	■ SOE ■ Kayıt □ BS Kapatma □ Kalıcı Kilit □ Geçici Kilit □ GAP □ Hat Açma ■ LED ■ Uzaktan sinyal
8	MOV Aşırı-Akım Koruması	■ SOE ■ Kayıt ■ BS Kapatma □ Kalıcı Kilit ■ Geçici Kilit ■ GAP □ Hat Açma ■ LED ■ Uzaktan sinyal
9	MOV Enerji Düşük-Ayar Koruması	■ SOE ■ Kayıt ■ BS Kapatma □ Kalıcı Kilit ■ Geçici Kilit ■ GAP □ Hat Açma ■ LED ■ Uzaktan sinyal
10	MOV Enerji Yüksek-Ayar Koruması	■ SOE ■ Kayıt ■ BS Kapatma ■ Kalıcı Kilit □ Geçici Kilit ■ GAP □ Hat Açma ■ LED ■ Uzaktan sinyal
11	MOV Sıcaklık Koruması	■ SOE ■ Kayıt ■ BS Kapatma □ Kalıcı Kilit ■ Geçici Kilit ■ GAP □ Hat Açma ■ LED ■ Uzaktan sinyal
12	MOV Dengesizlik Koruması	■ SOE ■ Kayıt ■ BS Kapatma ■ Kalıcı Kilit □ Geçici Kilit ■ GAP □ Hat Açma ■ LED ■ Uzaktan sinyal
13	GAP Kendiliğinden Tetikleme Koruması	■ SOE ■ Kayıt ■ BS Kapatma ■ Kalıcı Kilit □ Geçici Kilit □ GAP □ Hat Açma ■ LED ■ Uzaktan sinyal
14	GAP Reddetmeli Tetikleme Koruması	■ SOE ■ Kayıt ■ BS Kapatma ■ Kalıcı Kilit □ Geçici Kilit □ GAP □ Hat Açma ■ LED ■ Uzaktan sinyal
15	GAP Gecikmeli Tetikleme Koruması	■ SOE ■ Kayıt ■ BS Kapatma ■ Kalıcı Kilit □ Geçici Kilit □ GAP □ Hat Açma ■ LED ■ Uzaktan sinyal
16	Hat Açma SC Koruması	■ SOE ■ Kayıt ■ BS Kapatma □ Kalıcı Kilit ■ Geçici Kilit ■ GAP □ Hat Açma ■ LED ■ Uzaktan sinyal
17	Platform Ark-Flaş Koruması	■ SOE ■ Kayıt ■ BS Kapatma □ Kalıcı Kilit □ Geçici Kilit □ GAP □ Hat Açma ■ LED ■ Uzaktan sinyal
18	Bypass Kesici Kapatamama Koruması	■ SOE ■ Kayıt ■ BS Kapatma ■ Kalıcı Kilit □ Geçici Kilit □ GAP ■ Hat Açma ■ LED ■ Uzaktan sinyal
19	Bypass Kesici Kapatamama Alarmı	■ SOE ■ Kayıt □ BS Kapatma □ Kalıcı Kilit □ Geçici Kilit □ GAP □ Hat Açma ■ LED ■ Uzaktan sinyal
20	Bypass Kesici Açamama Koruması	■ SOE ■ Kayıt ■ BS Kapatma ■ Kalıcı Kilit □ Geçici Kilit □ GAP □ Hat Açma ■ LED ■ Uzaktan sinyal
21	Bypass Kesici Faz Uyuşmazlık Koruması	■ SOE ■ Kayıt ■ BS Kapatma ■ Kalıcı Kilit □ Geçici Kilit □ GAP □ Hat Açma ■ LED ■ Uzaktan sinyal
22	Harici SSR Açma SC koruması	■ SOE ■ Kayıt ■ BS Kapatma ■ Kalıcı Kilit □ Geçici Kilit □ GAP □ Hat Açma ■ LED ■ Uzaktan sinyal
23	Başka bir SSR Açma Yerel SC Koruması	■ SOE ■ Kayıt ■ BS Kapatma ■ Kalıcı Kilit □ Geçici Kilit □ GAP □ Hat Açma ■ LED ■ Uzaktan sinyal
24	Hat Akımı İzleme Alarmı	■ SOE ■ Kayıt ■ BS Kapatma □ Kalıcı Kilit ■ Geçici Kilit □ GAP □ Hat Açma ■ LED ■ Uzaktan sinyal
25	SF6 Basınç Blokaj Alarmı	■ SOE ■ Kayıt ■ BS Kapatma ■ Kalıcı Kilit □ Geçici Kilit □ GAP □ Hat Açma ■ LED ■ Uzaktan sinyal
26	Kontrol Devresi Kesinti Alarmı	■ SOE ■ Kayıt □ BS Kapatma □ Kalıcı Kilit ■ Geçici Kilit □ GAP □ Hat Açma ■ LED ■ Uzaktan sinyal

Note-1:

1. **SOE:** means Incident reports;
2. **Record:** means transient fault record;
3. **Permanent Lock:** means locking re-insert SC permanently;
4. **Temporary Lock:** means locking re-insert SC temporarily;
5. **GAP:** means triggering GAP;
6. **Trip Line:** means triggering line switch;
7. **LED:** means lighting led in C&P cabinet;
8. **Remote signal:** means lighting related remote signal;
9. ■ : means yes;
10. □: means no.

Note-2:

Protection results such as Permanent Lock and Temporary Lock are controlled by some parameters like **"Times of allowed re-inserting for capacitor overload protection"** and "**Times of allowed auto-reinserting for SSR protection".**

17.3.2.2- Protection Principle Discription

17.3.2.2.1- Capacitor Overload Protection:

This protection is according to reverse time principle. The action current setting value in the reverse time curve is related to the capacitor bank rated current value. When the capacitor overload protection acts and sends three phase bypass breaker close command, FSC is temporary lockout. If the times of re-insertion in a period are more than the setting value, FSC will block re-insertion and start permanent lockout.

When the capacitor current is over the alarm setting value, waiting for a certain delay time, capacitor overload alarm will ocur.

Logic diagram of capacitor overload alarm:

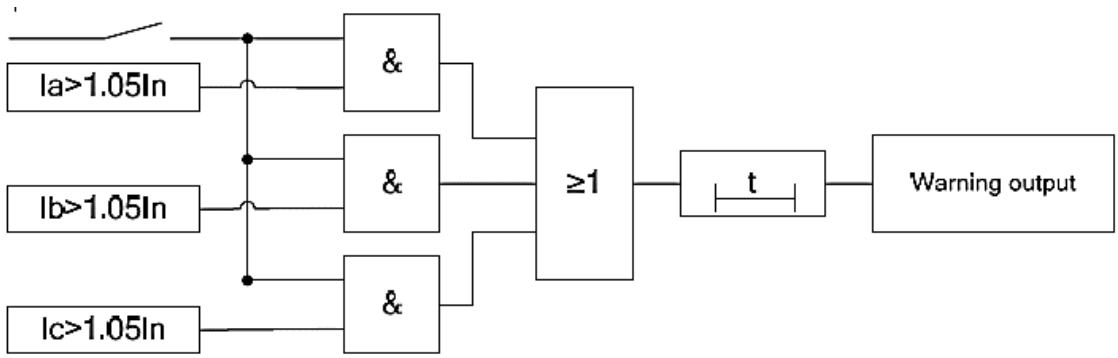

Logic diagram of capacitor overload protection:

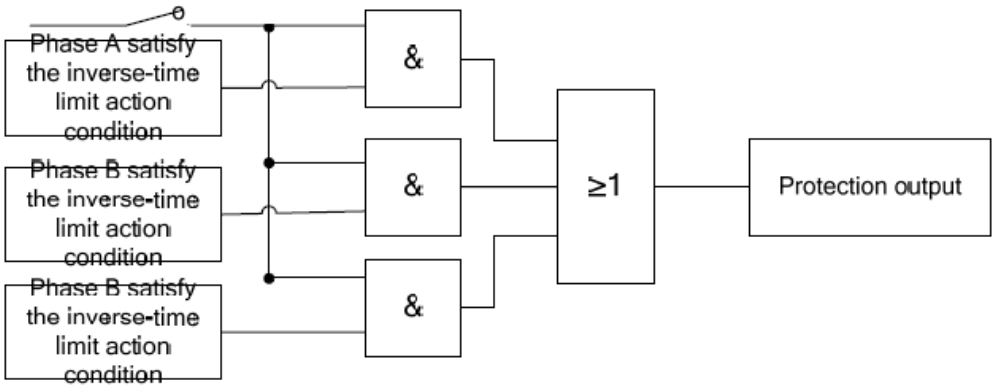

The **Ia**, **Ib** and **Ic** currents are three-phase capacitor currents and the **In** capacitor bank is the rated (rated) current.

17.3.2.2.2- Capacitor Unbalance Protection:

This protection has three groups of settings and delay time: alarm, low-setting protection, high-setting protection.

The settings of alarm and low-setting protection are according to the ratio of capacitor unbalance current and capacitor current. When the capacitor current is lower than the start-up value, the function of alarm and low-setting protection will be blocked.

The settings of high-setting protection are related to capacitor unbalance current. Alarms only gererate SOE. Low-Setting and high-setting protection will cause to close three phases bypass breaker and start-up permanent block.

Note: The low-setting protection inludes two steps: **"start-up"** and **"bypass".** When the low-setting protection calculated value is over the thresholds, once the duration is more than the setting delay time, the low-setting protection will start-up, but not bypss FSC. After waiting for the pre-set delay time for bypass breaker, the control and protection device will sent bypass FSC command and start-up permanent block FSC. In practice, the time span between the delay time for low-setting protection start-up and the delay time for low-setting protection tripping is several tens of minutes. Operators can transfer load during this period.

Logic diagram of capacitor unbalance alarm:

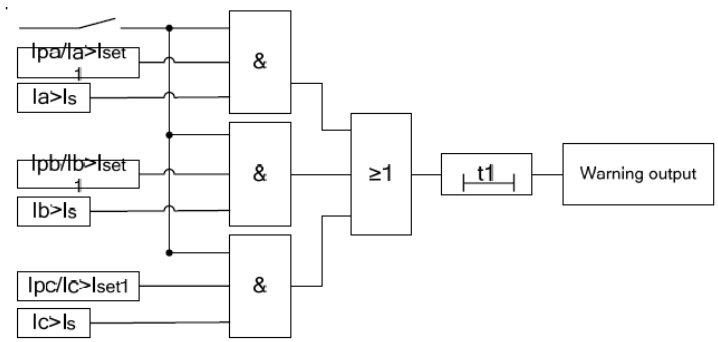

Logic diagram of capacitor unbalance low-setting protection:

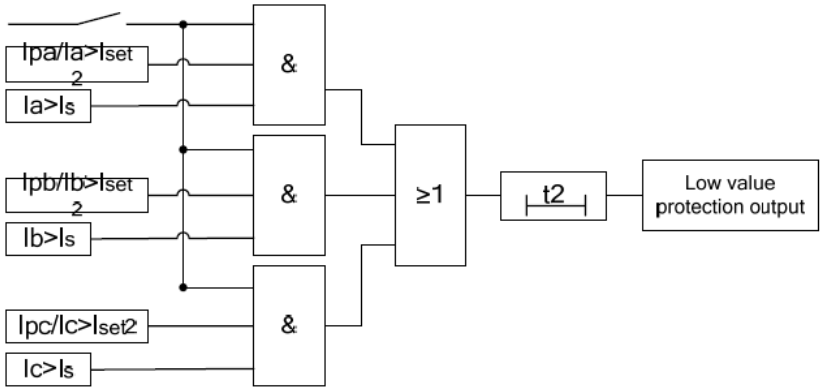

Logic diagram of capacitor unbalance high-setting protection:

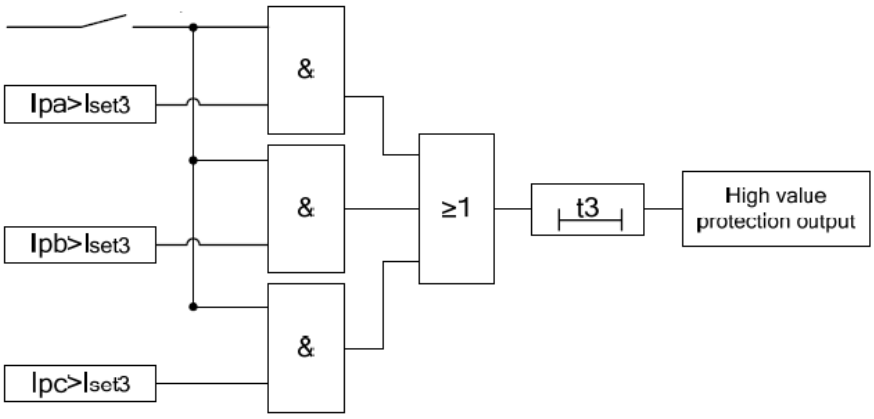

The Ia, Ib and Ic currents are **three-phase capacitor currents** and the In capacitor bank is the **rated (nominal) current**.

Ipa, Ipb and Ipc currents are **three phase capacitor unbalance currents**.

Iset1 current is the **alarm setting value**. Iset2 current is the **protection low setting value**. Iset3 current is the **protection high setting value**. Is is the **current threshold setting value**.

17.3.2.2.3- SSR (Sub-Synchronous Resonance) Protection:

This protection monitors the SSR component. If the line current SSR component proportion is more than the setting value, after a certain time, the bypass command will be send out and FSC will be temporarily blocked.

If the times of re-insertion in a period are more than the setting value, FSC will block re-insertion and start permanent lockout. If the proportion between SSR current and line current is more than alarm setting value, waiting for a certain delay time, SSR alarm will occur.

Logic diagram of SSR Warning:

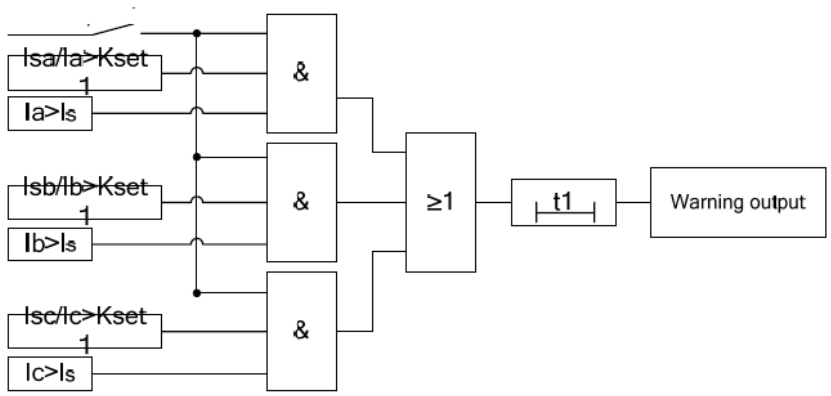

Logic diagram of SSR Protection:

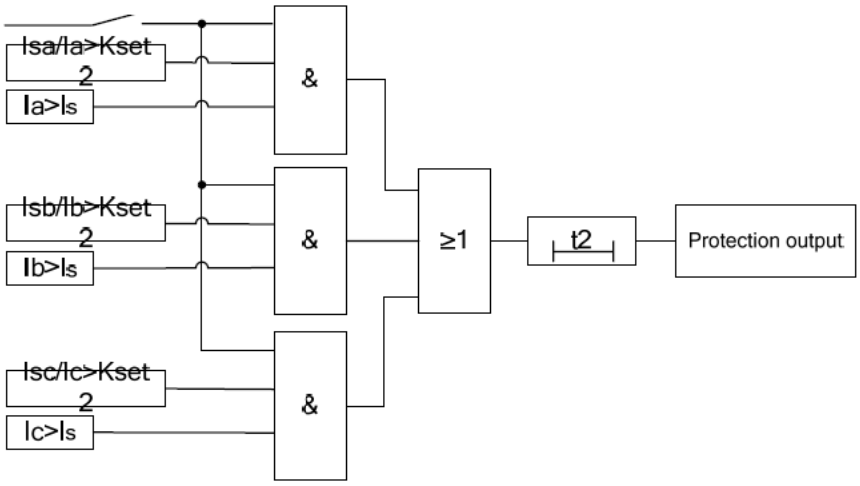

Ia, Ib and Ic currents are **valid values of the three-phase line current**. Isa, Isb and Isc currents are **valid values of three-phase sub-synchronous current.**

Kset1 is the **alarm rate setting value** and Kset2 is **the ratio setting value**. Is is **the current threshold setting value.**

17.3.2.2.4- MOV Over-Current Protection:

This protection monitors the **MOV current**.

If any phase of MOV current is more than the setting value, close bypass breaker (single phase or three phases according to bypass mode), trigger GAP and temporarily block SC.

If **two or three phase of MOV current are more than the setting value**, close bypass breaker (single phase or three phases according to bypass mode),and trigger GAP.

Logic diagram of MOV over-current protection:

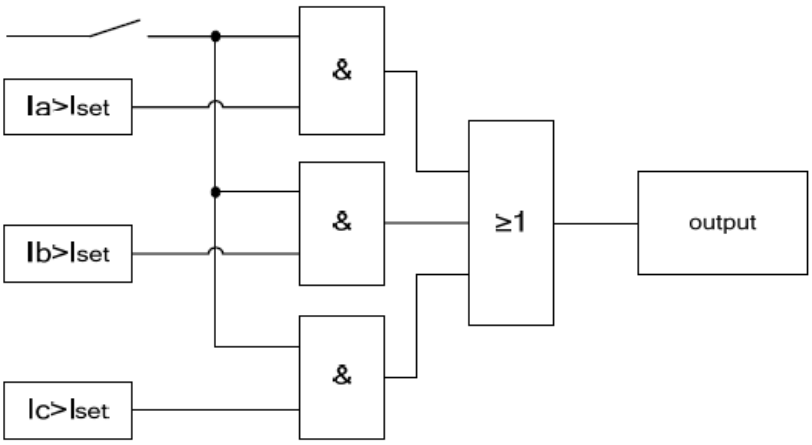

Ia, Ib and Ic currents are three phase MOV impulses. **Iset** current is also the value of MOV overcurrent protection.

17.3.2.2.5- MOV Energy Protection:

If absorbing too much energy, MOV will be damanged. This protection monitors MOV energy. If the energy reaches the low-setting value, close the bypass breaker, trigger GAP and temporarily block FSC. If the energy is growing to reach the high-setting value, close the bypass breaker, trigger GAP and block SC permanently.

Logic diagram of MOV low energy protection:

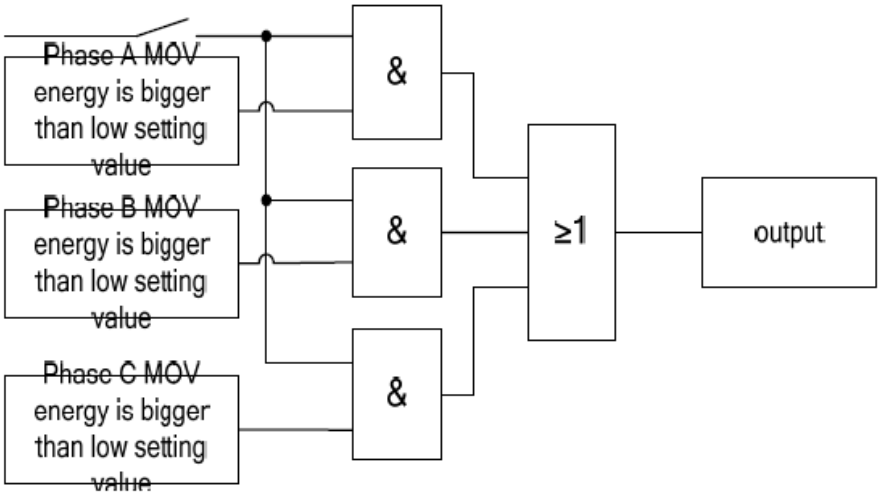

Logic diagram of MOV high energy protection:

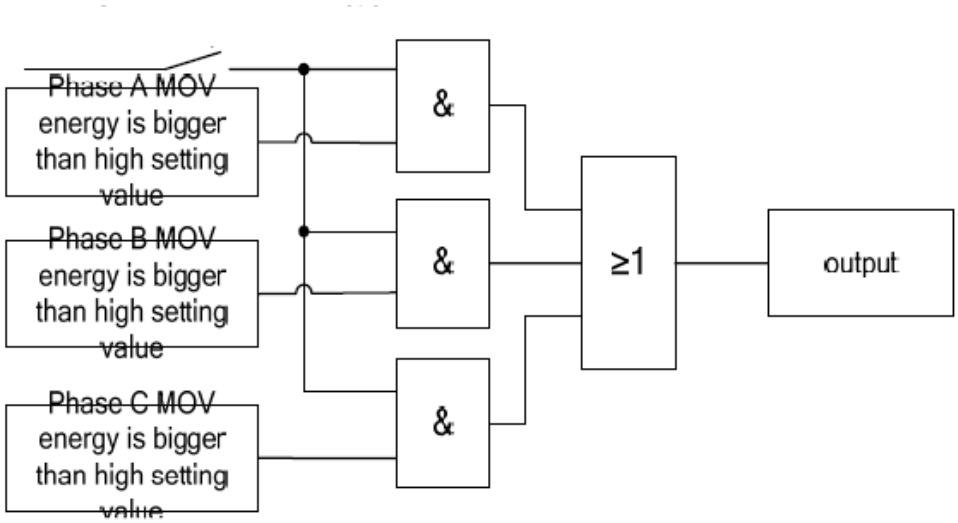

17.3.2.2.6- MOV Temperature Protection:

If MOV temperature is too high, MOV will be damanged. This protection monitors MOV temperature. If the proportion reaches the protection setting value, close the bypass breaker, trigger GAP and temporarily block SC. If the MOV temperature is lower than the allowed auto-reinserting value, FSC will auto-reinsert. If two phases or three phases failure occurs, close the bypass breaker, trigger GAP and block FSC permanently.

Logic diagram of MOV temperature protection:

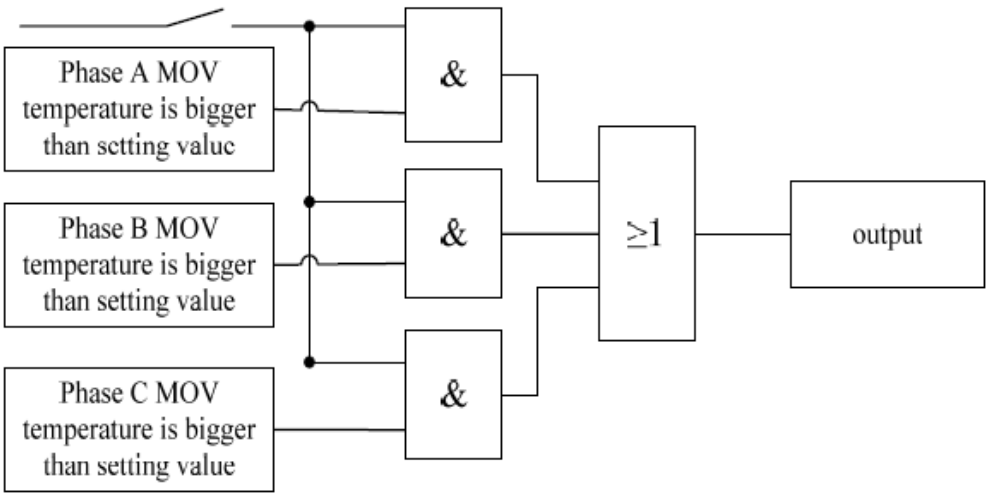

17.3.2.2.7- MOV Unbalance Protection:

This protection monitors two groups of MOV current to identify MOV failures. Normally the two groups of MOV current is balanced.

If some part of one group is damanged, two groups of MOV current will be unbalanced. If the unbalanced degree is over the setting value and the total current of two groups is more than the start-up value, close the bypass breaker, trigger GAP and block FSC permanently.

Logic diagram of MOV unbalance protection:

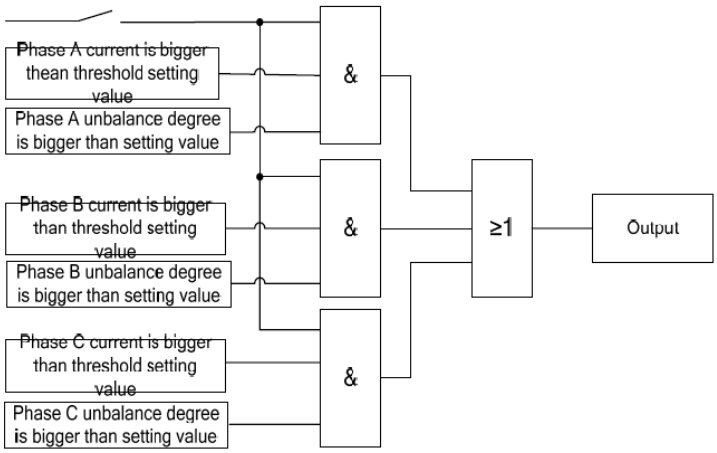

17.3.2.2.8- GAP self-triggering protection:

GAP self-triggering occurs if GAP current appears without triggering GAP command sent by protection system. If GAP self-triggering protection acts, close bypass breaker(single phase or three phase according to bypass mode),temperarily block SC. If the action times is more than 2 in one hour, then block auto-reinsertion and start permanent lockout of FSC.

Logic diagram of GAP self-triggering protection:

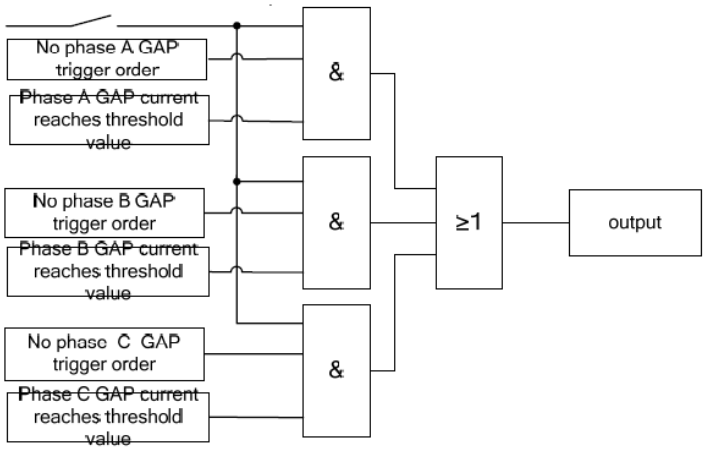

17.3.2.2.9- GAP refused triggering protection:

If no GAP current is detected continuously, after protection system send GAP triggering command, GAP refused triggering protection will close the bypass breaker and block FSC permanently.

Logic diagram of GAP refused triggering protection:

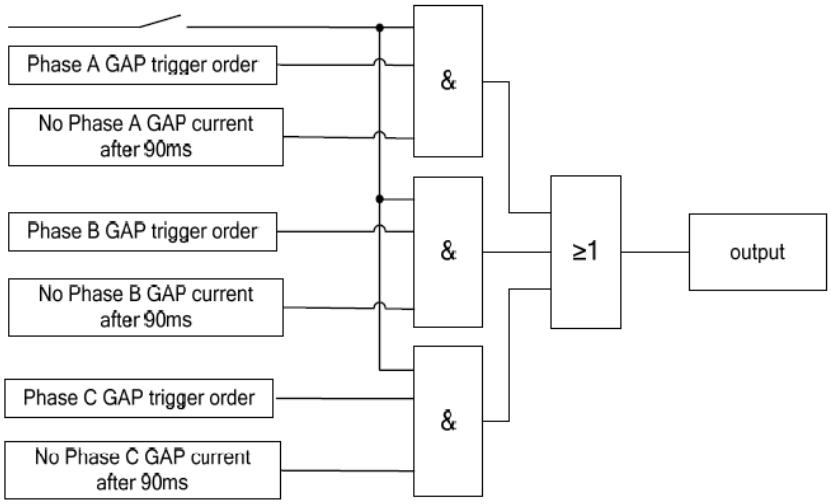

17.3.2.2.10- GAP delay triggering protection:

If there is no GAP current during the normal trigger period after GAP trigger command send out, however GAP current appears during the refused trigger period, GAP will be considered malfunction. GAP delay triggering protection will close three phase bypass breaker and block FSC permanently.

Logic diagram of GAP delay triggering protection:

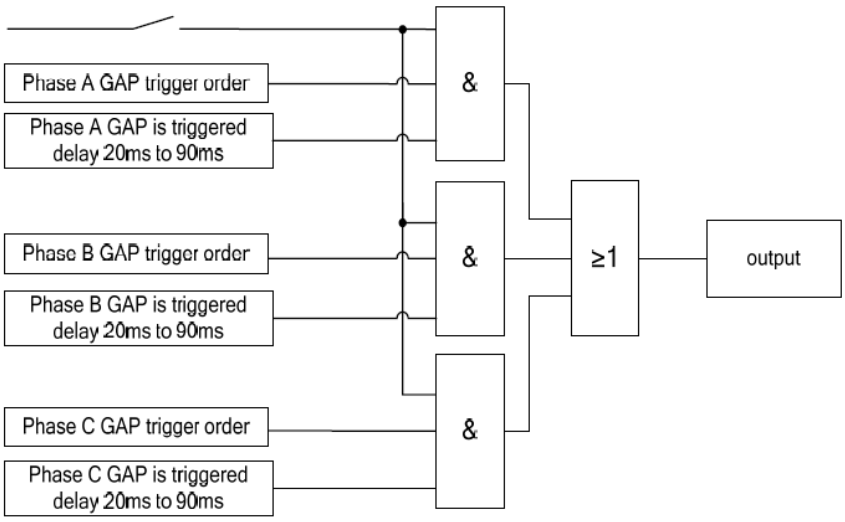

17.3.2.2.11- Line tripping FSC protection:

When FSC is in operation, if the line tripping FSC signal is valid, then this protection acts to close bypass breaker(single phase or three phase according to bypass mode),temporarily block FSC.

If two or three phases fault occurs, closes bypass breaker and triggers GAP.

Logic diagram of Line trip FSC protection:

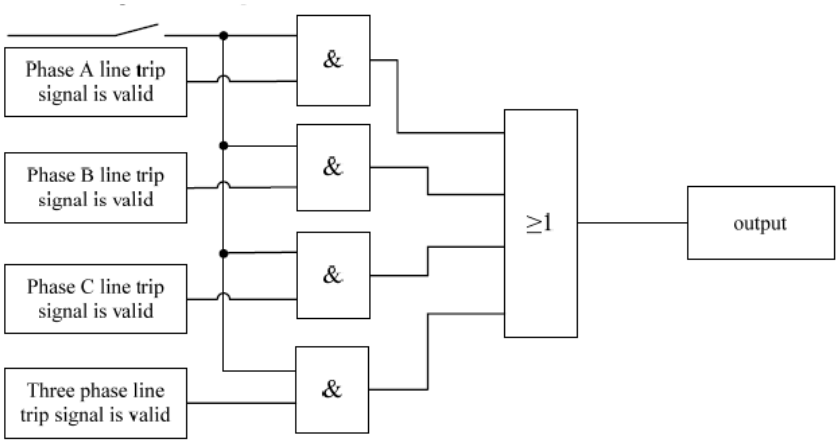

17.3.2.2.12- Platform flashover protection:

This protection monitors the current from the device on the platform to the platform. Normally, the current should be zero. But if there are some insulation breakdowns between device and platform, a loop current will pass through the platform. If there is any phase platform current is larger than the setting value, this protection acts to close bypass breaker and block FSC permanently.

Logic diagram of Platform flashover protection:

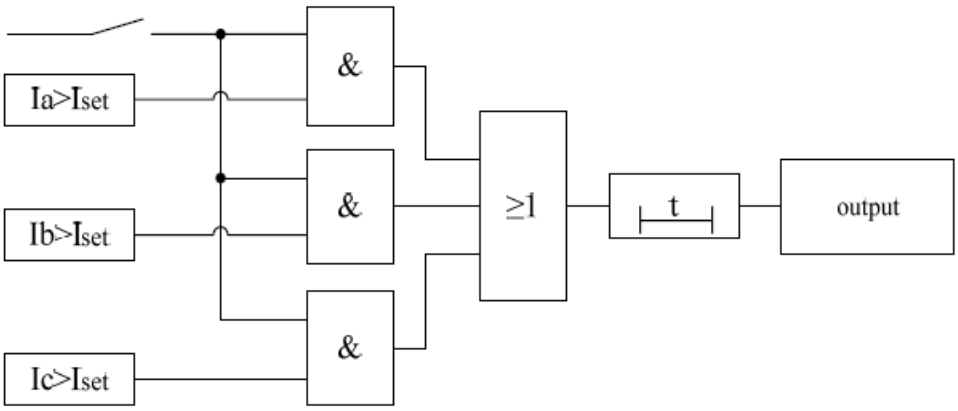

Ia, Ib and Ic currents are three-phase platform currents. **Iset** current is the setting value of platform flashover protection.

17.3.2.2.13- BS fail-to-close protection

If the closing bypass breaker command from any protection is sent out, but the accessory contacts state of bypass breaker is still open and no current is detected in the bypass breaker branch, BS fail-to-close protection will act to close bypass breaker and block FSC permanently. If FSC is in operation, the commands of tripping line and bypass another FSC will also be sent out. The relay out signal will keep 1 second. If the accessory contacts state of bypass breaker is open, but the bypass breaker branch current does not meet the criteria, the protection will not act but send alarms.

Logic diagram of BS fail-to-close protection:

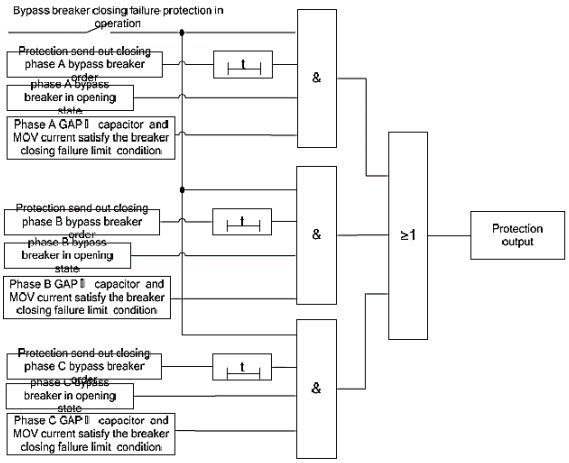

17.3.2.2.14- BS fail-to-open protection

If the opening bypass breaker command from any protection is sent out, but the accessory contacts state of bypass breaker is still close, BS fail-to-open protection will act to close three phase bypass breaker and block FSC permanently.

Logic diagram of BS fail-to-open protection:

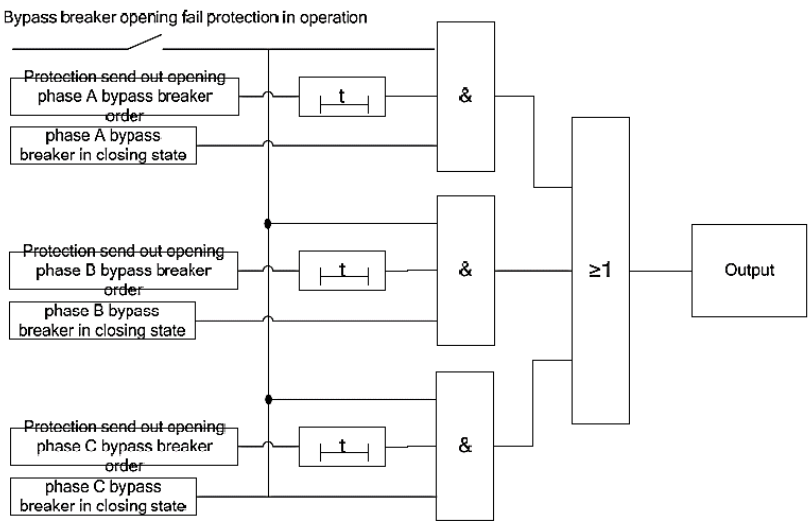

17.3.2.2.15- BS phase disagreement protection

This protection monitors three phase bypass breaker status. If there is any disagreement, close three phase of bypass breaker and block SC permanently after a certain delay time.

Logic diagram of BS phase disagreement protection:

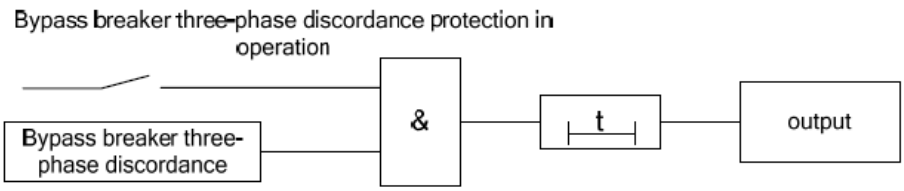

17.3.2.2.16- External SSR tripping FSC protection

If the external SSR tripping FSC signal is valid, close three phase of bypass breaker and block FSC permanently.

Logic digram of External SSR tripping FSC protection:

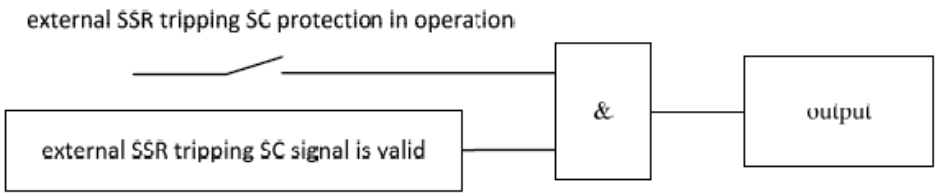

17.3.2.2.17- Another FSC tripping local FSC protection

This protection is used in sectionalized SC. If the protection acts, the command of closing bypass breaker and permanently blocking SC will be sent out.

Logic protection of Another FSC tripping local FSC proctection:

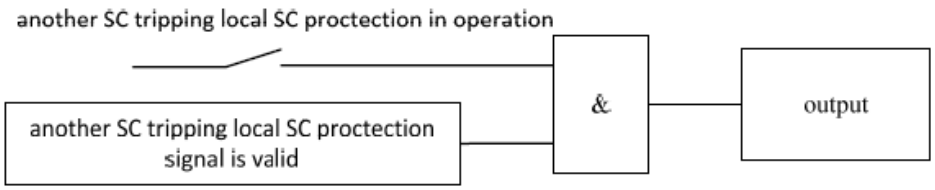

17.3.2.2.18- Line current monitoring alarm

Duaring FSC re-insertion, if line current is very high, automatic reinsertion should be blocked. If any phase line current is higher than the setting value, the warn is sent out and block FSC re-insertion.

Logic diagram of Line current monitoring alarm:

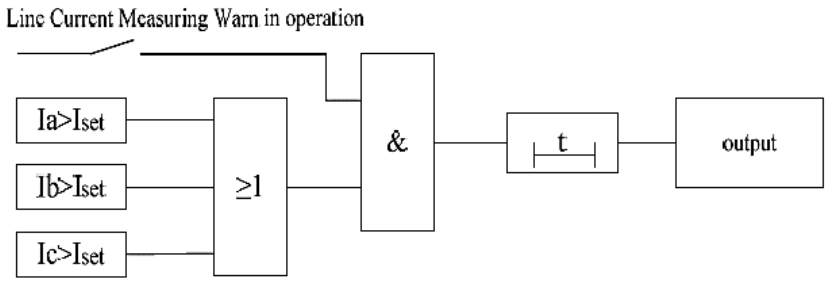

17.3.2.2.19- BS SF6 pressure blocking alarm

This protection monitors three phase bypass breaker **SF6 pressure blocking signal status**. If any phase's signal is valid, the alarms will be sent out and the close/open bypass breaker operation from protection system and substation monitor system will be blocked.

Logic digram of BS SF6 pressure blocking alarm:

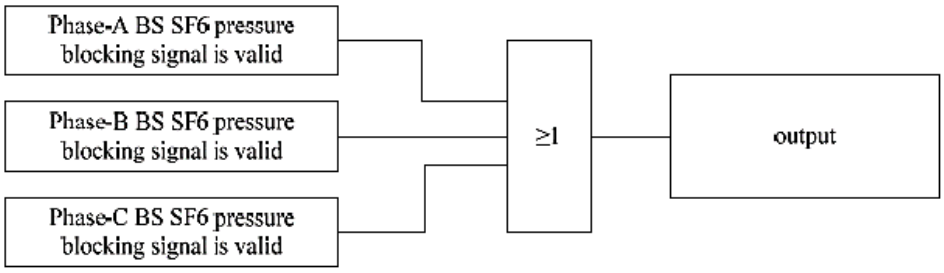

17.3.2.2.20- BS control circuit breaking alarm

This protection monitors bypass breaker TWJ and HWJ relay status. If any phase's TWJ and HWJ relay are valid or invalid in the same time, then after a certain delay time, the alarms will be sent out and the open bypass breaker operation from protection system and substation monitor system will be blocked.

Logic diagram of BS control circuit breaking alarm:

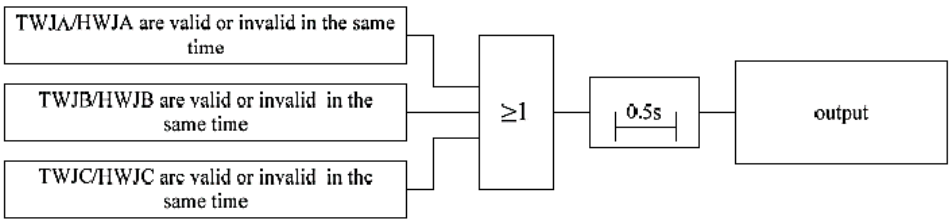

17.3.2.2.21- BS position unclear alarm

This protection monitors bypass breaker three phase open position signal and close position signal status. If any phase's open position signal and close position signal are valid or invalid in the same time, then after a certain delay time, the alarms will be sent out.

Logic diagram of BS position unclear alarm:

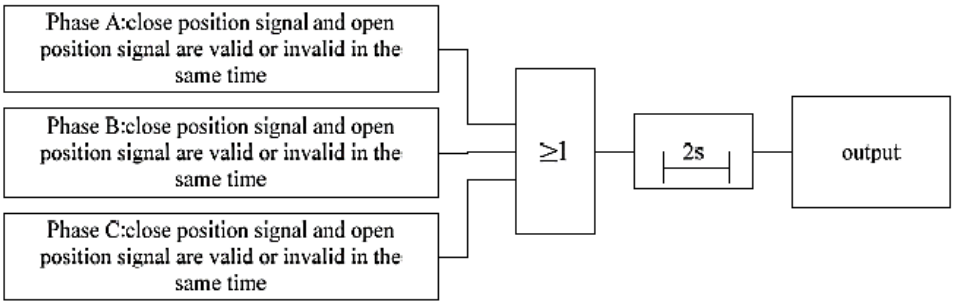

17.3.2.2.22- CT breaking alarm

This protection monitors three phase line current and capacitor current. If there is no current in one phase while the other 2 phases are normal, the alarms will be sent out after a certain delay time.

17.4- TFR Function

17.4.1- General

Control and protection system of FSC have TFR function. When fault occurs on FSC and line, or user manually starts TFR, TFR function starts up to record analog and IO signal for analysising fault of FSC and line.

Control and protection system of SC can be connected with independent TFR device, becides TFR function in itself. The independent TFR device can implement all above work. Brazil FSC's independent TFR device is manufactured by **"Reason"**.

17.4.2- TFR function introduction

FSC has 2 sets of independent measure, protection and TFR system. TFR system can record analog signal of FSC primary equipments, position information of disconnects and breakers and IO information about protection action. Primary equipment current simultaneously goes into 2 CTs which are connected into 2 independent platform measure boxes. Platform measure boxes send current data to protection system, D/A module and FSC TFR system through optical fiber. D/A module converts current data to analog signals which are sent to independent TFR device. After protection action, protection system sends IO information about protection action to TFR system through CAN cable and

independent TFR device through empty contact. By this mean, analog signals and IO data of TFR system are reliable and stable, and data of 2 sets of TFR system are absolutely independent.The figure about signal flow of TFR system is as beloe figüre. Main technology characters of FSC's.

TFR function include:

1. 2 methods to start up TFR, automatically and manully;
2. Sampling frequency is 128 sampling points per cycle;
3. Pre-recording time is 25 cycles;
4. The recording time is 200 to 300 cycles, adjusted automatically according to the situation.

Signals flow of TFR System:

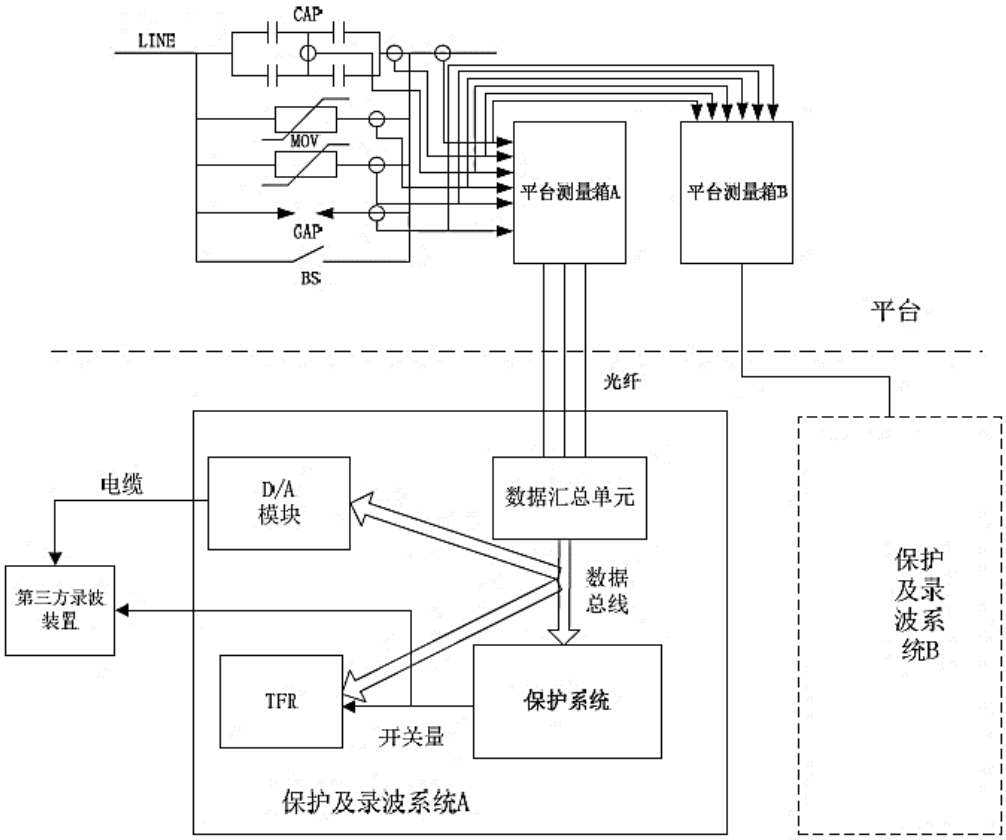

Figure 7: Signals flow of TFR system

17.5- Platform Measurement Function

The FSC platform measurement function is as the following figure showing. The function includes platform electrical data sampling, photoelectric conversion, and the optical channel through which data are transmitted to the control and protection devices on the ground.

Platform measurement function diagram:

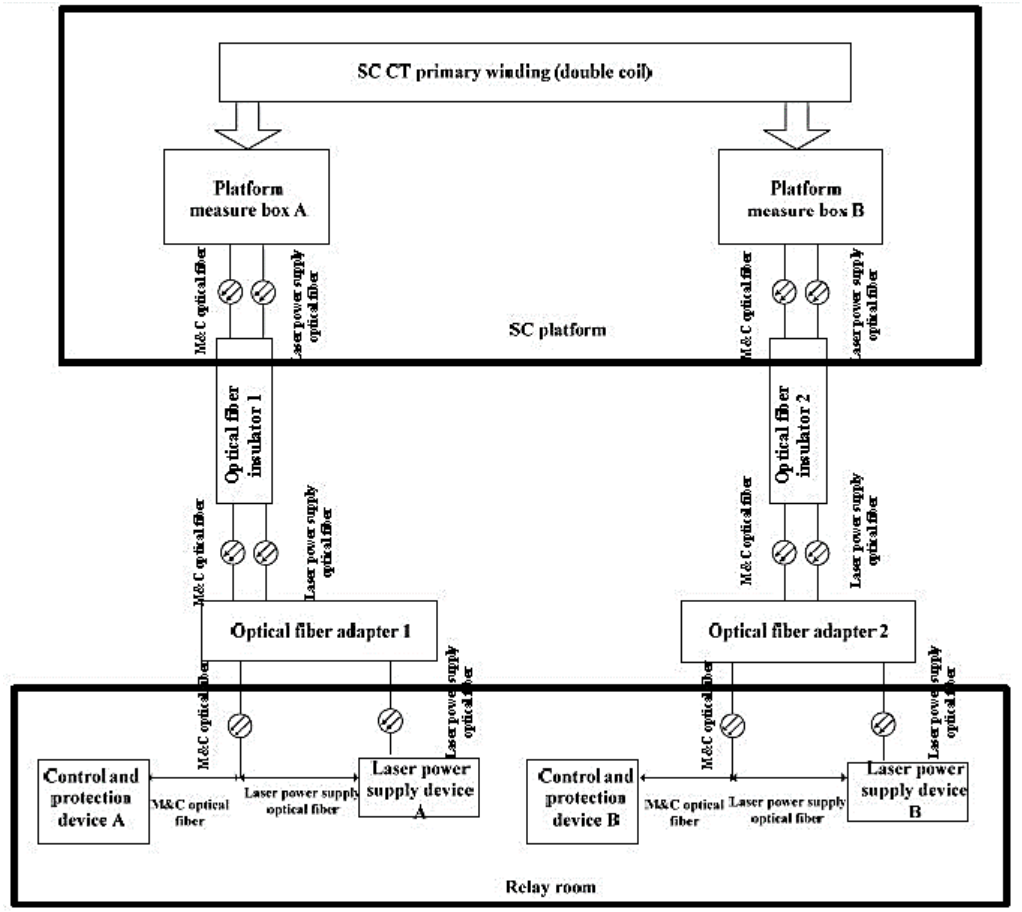

Figure 8: platform measurement function diagram

17.5.1- Data Processing Funciton

17.5.1.1- Data Sampling Function

A/D conversion units in the platform measure box A and B can convert each analogy signals to digital signals based on the synchronous sampling pulses. After A/D conversion, the sampling data will be sent to the control and protection devices in the relay room in the form of optical signal.

The characteristic of platform measure box:

1. Low power consumption;
2. Strong resistance to electromagnetic interference;
3. High sampling frequency (128 sampling points per cycle);
4. Simultaneous sampling all channels.

17.5.1.2- Data processing function

Data processing unit is in the control and protection devices, which receives the optical signals from platform measure box, converts these optical signals to electrical signals, analyzes sampling data and transmits the sampling data to each unit in pre-defined data format.

17.5.2- Laser Power Function

Normally, the power supplying for the platform measurement system is provided by line current NCT (CT power supply mode). When line current is unstable because of system faults or CT power supply can not work in some conditions like SC in maintenance mode, to guarantee power supply continouslly, the power supply will switch to laser power supply automatically.

L**aser power supply working method is:** the ground laser driver units generate laser power, which will be sent to the platform through optical fiber. The photoelectical conversion devices and circuits will convert the laser power to DC power. The laser power supply is an important part of SC power supply system. It guarantees the power supply for measurement system continous and reliable.

The basic principle of laser power supply devices is showing as the following figure. When the laser control unit detect CT power supply abnormal, it will send comment to laser-driven unit driving Laser diode generate laser power. Laser power will be send to theplatform through optical fiber and the power supply will be switched to laser power supply. Laser-dirven unit monitors the laser diode working state and sends the monitored current and temperature to the control and protection device through laser control unit.

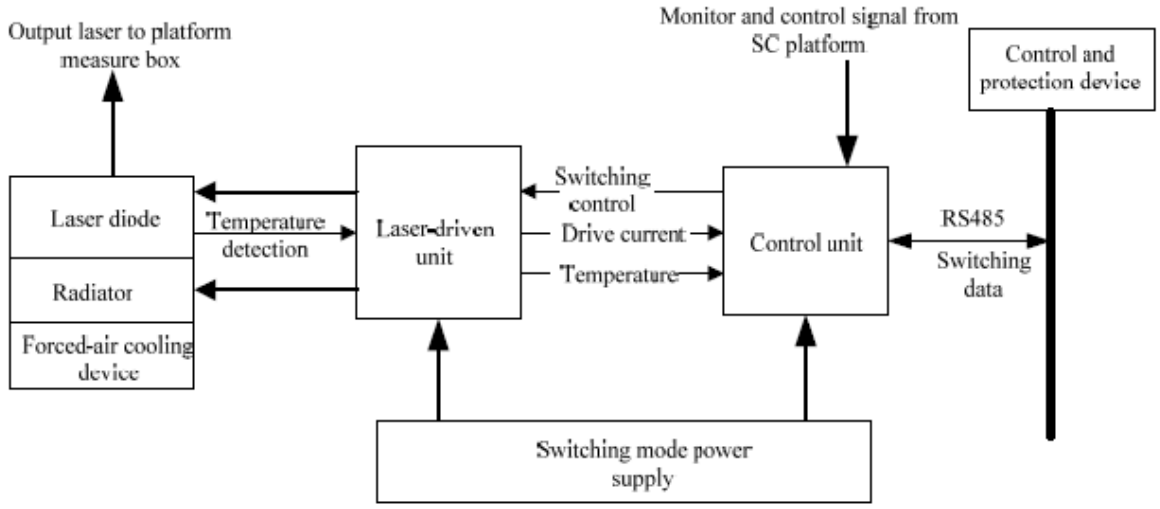

Figure 9: laser power function diagram

The working principle of platform measure box power supply is as the following **figure 10** showing.

Platform measure box monitors the working status of platform power supply and sends the monitored information to the laser control unit in the ground relay room.

In the meaning while, it receives the laser power transimitted through optical fiber and convert the laser power to electrical power, which is connected with CT power supply in parallel to supply power to data processing unit. Energy storage unit is used to guarantee power supply continous.

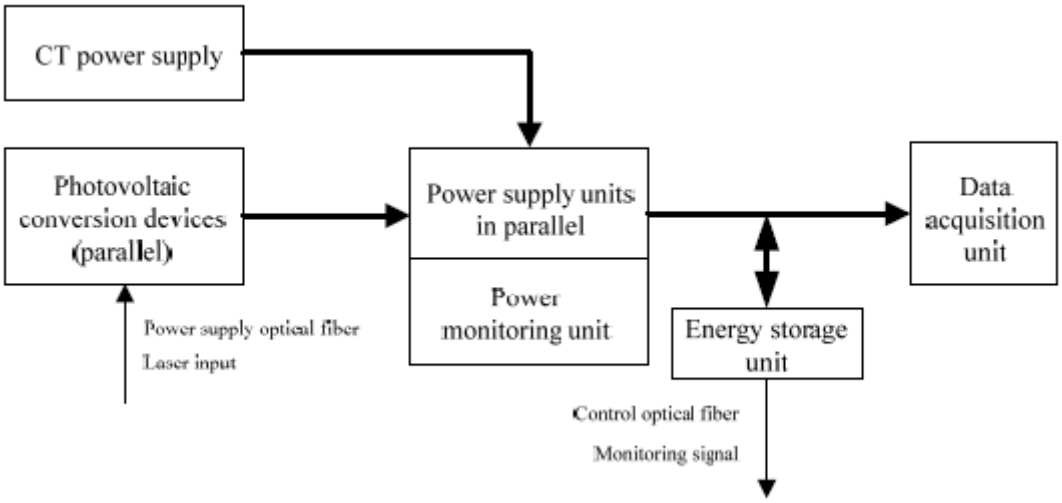

Figure 10: Platform measure box power function diagram

FSC laser power supply mode has the following characteristic:

1. Strong resistance to electromagnetic interference;
2. High energy density, small device size;
3. Real-time working status monitoring function;
4. Hardware protection function in case of fault;
5. Can be connected with other power supply in parallel;
6. Energy storage unit used to guarantee power supply continous.

17.6- Measurement and Control Function

SC measurement and control function is completed by measure and control device, which has functions of tele-metering (analogy signal measurement and transmission), tele-signal (logic signal acquisition and transmission), tele-control(control breakers and switches locally or remotelly).

Measurement and control system adopts modular design concept. DI and DO channels can be configured flexibly by deploying different components.

17.6.1- Analoy signal measurement function

Measure and control system acquires, samples and processes analogy signals, including electrical signals and non-electrical signals. The processed data and calculated results are sent to HMI, substation monitoring system and remote monitoring center.

The main function includes:

1- Measure **8 AC voltage and 8 AC current channels**. These channels are divided into two groups, one of which includes 4 AC voltage and 4 AC current channels:

- **Group-1:** UA, UB, UC, 3U0;
- **Group-2:** IA, IB, IC, 3I0.

Sampling frequency can be tracked automatically. If the first group UA has voltage, the frequency of the first group UA will be tracked to set the sampling interval. If the first group UA has no voltage, but the second group UA has voltage, the frequency of the second group UA will be tracked to set the sampling interval. If both the first and the second group UA has no voltage, the system base frequency will be used to set the sampling interval.

2- Calculate three line voltage, real power, reactive power and power factor for each group. This function is an optional function and set before shipment.

3- Zero sequence voltage and zero sequence current can be measured or calculated through three phase voltage and three phase current according to project design. This function is an optional function and set before shipment.

4- **Harmonic monitor function**. The 3~21th odd harmonics'real value and content can be measured for each group UA and IA.

5- **Phase angle measurement.**

6- **Frequency measurement.** Two groups AC voltage frequency can be measured separately.

- To 50Hz system, the frequency measurement range is **45Hz~55Hz**.
- To 60Hzsystem, the frequency measurement range is **54Hz~66Hz**.

7- Zero sequence voltage and zero sequence current limit-exceeding alarm. This function is an optional function and set before shipment.

8- **PT circuit breaking alarm**. This function is an optional function and set before shipment.

9- **Six DC channels measurement**

10- **AC channel zero-drift limit-exceeding alarm**. Calculate zero-drift values and send alarms when the values exceed the limits and keep for more than 10s.

11- **Precision Calibration for each analogy channel function.**

17.6.2- Digital Channel Measurement Function

Measure and control system acquires, filters and processes digital signal. The processed results are sent to HMI, substation monitoring system and remote monitoring center.

The main function includes:

1- The filter time can be set to 5ms/15ms/50ms optionally, and the default value is 15ms.

2- The digital signal change generates SOE by default, which can be cancled.

3- The initial digital signal status isn't recorded to SOE by default, which can be added.

Each digital signal should be configured before shipment according to the project design.

17.6.3- Breakers and Switches Control Function

Users can control breakers and switches through HMI, substation monitoring system or remote dispatch center. To prevent mis-operation, the switch **"protection room/remote/local"** position determines breakers and switches control rights.

The detailed function is listed in following:

1- The control of breakers and switches must follow the steps:

- preset,
- execute,
- and verificate.

2- **The output signal hold time** of each relay can be set between 0.1s~60s flexibly. The value will be set before shipment and the default value is 1s.

3- **Relay output circuit self-check function.** If the relay acts or resets abnormally, alarms will occur.

17.6.4- Other Functions

Switch phase disagreement function. If this function is put into use, when one switch phase's open and close position is valid or invalid **simultaneously for more than 30s, the alarm will occur**.

17.7- Hardware (Devices) Description

17.7.1- General

Control and Protection System;

- Control and Protection devices, (CP-10);
- Measurement and Control devices, (MC-10);
- Switch Operation devices, (SO-10);
- Breaker Operation devices, (BO-10);
- Laser Power devices, (LPS-10);
- Platform Measure box and etc.

occurs from this devices.

The control and protection system **adopts a common high-performance hardware platform**, which is designed in accordance with the standardized, **modular, serialization methods**， taking full account of the harsh operating environment requirements, with a wide working temperature range, anti-electromagnetic interference ability and other characteristics.

17.7.2- Control and Protection device (CP-10)

17.7.2.1- Main Technical Indicators

Control and protection device **(CP-10)** is a 6U standard box and rear plug-in structure, including**;**

- power supply board,
- communication management board,
- protection board,
- data process board,
- Digital Input (DI) boardi,
- and relay output board.

The device receives the analogy channel data, system status signal; executes control and protection calculation and strategy; outputs protection action command; sends status information to the monitoring system. It completes functions of data sampling, control, protection and TFR.

The main technical indicators are:

- SPI data input:3 channels (optical);
- Relay output: 3 outputs (optical);
- Digital input: 68 inputs, 170 maximum;
- Relay output:28 outputs (independent contact),70 maximum;
- Communication mode: 4 ethernet (LAN), 5 RS485 and 1 RS232 (used for test);
- Communication rate: ethernet 100M, self-adaptive;
- Timing mode: IRIG_B (DC) + PPS;
- Weight: ≤3kg.

17.7.2.2- Device Structure

Control and protection device uses standard single 6U chassis structure, with a built-in installation on control and protection cabinet. The front panel hole size shown in below Figure 11.

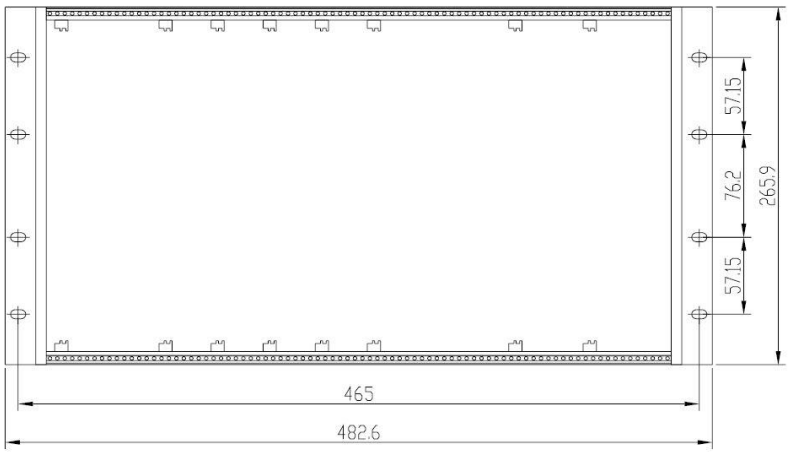

Figure 11: Front panel hole size of control and protection device (CP-10)

17.7.2.3- Device Front Panel

The front panel of control and protection device is showing as figure 12, which is devided to HMI display area, operation key area and status indicators area, providing local operation and status indication functions. HMI display and key operation description are detailed in operation manual.

The status indicator signals include:

- **Running indicator:** flash when the device working normally;
- **Fault indicator:** lights when faults occurring;
- **Alarm indicator:** lights when alarms occurring;
- **Block indicator:** lights when block events occurring.

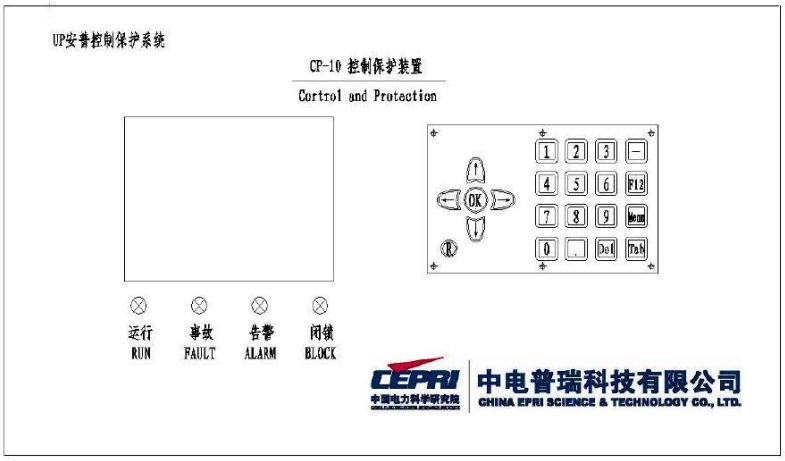

Figure 12: Front panel of control and protection device (CP-10)

17.7.2.4- Device Back Panel

The control and protection device back panel is showing in figure 13, including power supply input, RS485 input interface, RS232 debug interface and LAN communication network interface, control and protection command output interface, status monitoring input interface, the platform measurement data process input interface, synchronization output interface, digital input, relay output interface.

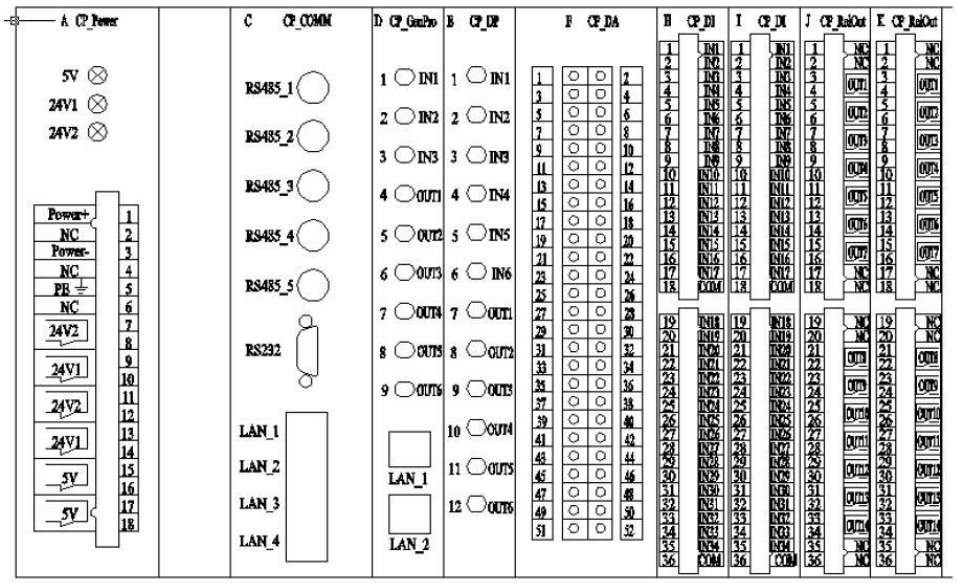

Figure 13: Back panel of control and protection device (CP-10)

17.7.2.5- Device back panel wiring terminal arrangement

Control and protection device back panel wiring terminal arrangement is shown in Figure 14. It should be noted that according to different SC project design, control and protection device back panel wiring arrangement may also be adjusted accordingly. Figure 14 is an example of a SC project for reference purposes only.

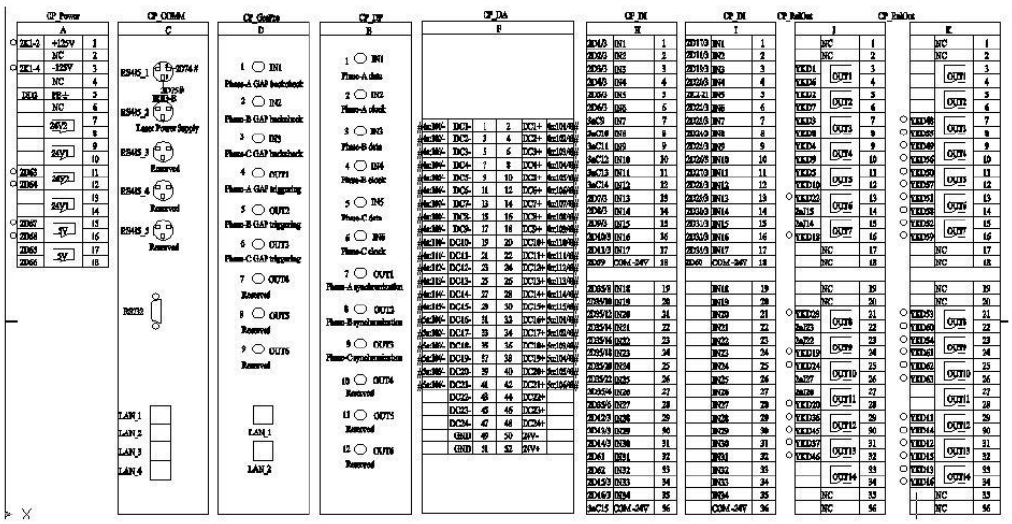

Figure 14: back panel wiring terminal arrangement of control and protection device

17.7.2.5.1- Communication Interface description

17.7.2.5.1.1- RS485

5 RS485 interface, from top to bottom each function is assigned as shown in **Table 1**. Three core air pin as defined in **Table 2**.

RS485(from top to bottom)	function description
1	Simplex, receiving IRIG_B (DC) code clock signal
2	Half-duplex communication, communicating with laser power supply device.
3	Half-duplex communication, spare
4	Half-duplex communication, spare
5	Half-duplex communication, spare

Table 1: RS485 fuction arrangemnet

air pin	RS485 signal
1.	-
2.	B
3.	A

Table 2: three core air pin's definition

17.7.2.5.1.2- LAN

The function of 4 100M self-adaptive Ethernet/RJ45 interface is showing in **Table 3**.

Electrical Ethernet (from top to bottom)	Function define
1.	Monitoring network A
2.	Monitoring network B
3.	TFR network
4.	HMI network

Table 3: LAN function arrangement

Note: the final definition please refers to the project design.

17.7.2.5.2- Control and Protection Interface description

The control and protection interface terminal define and parameters are list in **Table 4**:

Terminals(from top to bottom)	Signal type	IO type	Function
1.	Optical signal	input	■ optcial signal input ■ Phase-A GAP check signal
2.	Optical signal	Input	■ optcial signal input ■ Phase-B GAP check signal
3.	Optical signal	Input	■ optcial signal input ■ Phase-C GAP check signal
4.	Optical	Output	■ optcial signal output
	signal		■ Phase-A GAP trigger signal
5.	Optical signal	Output	■ optcial signal output ■ Phase-B GAP trigger signal
6.	Optical signal	Output	■ optcial signal output ■ Phase-C GAP trigger signal
7.	Optical signal	Output	■ optcial signal output ■ Phase-A TPSC signal (used in TCSC)
8.	Optical signal	Output	■ optcial signal output ■ Phase-B TPSC signal (used in TCSC)
9.	Optical signal	Output	■ optcial signal output ■ Phase-C TPSC signal (used in TCSC)
10.	Electrical ethernet	Input/Output	■ 100M Ethernet communication ■ spare
11.	Electrical ethernet	Input/Output	■ 100M Ethernet communication ■ spare

Table 4: Control and protection interface description

6 optical signal inputs and 6 optical signal outputs, used for platform measure box data sampling synchronization and acquire. Terminal definition and parameters are listed in **Table 5**:

Terminals(from top to bottom)	Signal type	IO type	Function
1.	Optical signal	input	■ optcial signal input ■ Phase A data signal
2.	Optical signal	input	■ optcial signal input ■ Phase A clock signal
3.	Optical signal	input	■ optcial signal input ■ Phase B data signal
4.	Optical signal	input	■ optcial signal input ■ Phase B clock signal
5.	Optical signal	input	■ optcial signal input ■ Phase B data signal
6.	Optical signal	input	■ optcial signal input ■ Phase C clock signal
7.	Optical signal	Output	■ optcial signal output ■ Phase A synchronization
8.	Optical signal	Output	■ optcial signal output ■ Phase B synchronization
9.	Optical signal	Output	■ optcial signal output ■ Phase C synchronization
10.	Optical signal	Output	■ optcial signal output ■ spare
11.	Optical signal	Output	■ optcial signal output ■ spare
12.	Optical signal	Output	■ optcial signal output ■ spare

Table 5: DP interface

17.7.2.5.3- Digital input signal description

The digital input signals are connected to the empty contacts, passing photoelectric isolation through terminal block and entering to the device. **Signal input filter circuit guarantees a strong anti-interference ability.**

17.7.2.5.4- Relay output signal description

The relay output unit outputs relay contact signals according to the control command. In order to insure the output reliability, each control command output is executed by three relays. Only if the block relay is open and the startup relay acts, the control command can be sent to the output relay. The device has the function of self-check blocking to prevent protection malfunction output induced by hardware damage.

17.7.2.5.5- Analog output signal description

D/A module outputs 3 phases AC analog signals,7 analog signals every phase,summing to 21 channels. Every analog signal is 4~20mA.All these signals are listed in below **Table 6**:

No.(from top to bottom)	Terminals		Signals
1	1	2	A phase capacitor unbalance current
2	3	4	B phase capacitor unbalance current
3	5	6	C phase capacitor unbalance current
4	7	8	A phase MOV1 current
5	9	10	B phase MOV1 current
6	11	12	C phase MOV1 current
7	13	14	A phase MOV2 current
8	15	16	B phase MOV2 current
9	17	18	C phase MOV2 current
10	19	20	A phase platform current
11	21	22	B phase platform current
12	23	24	C phase platform current
13	25	26	A phase GAP current
14	27	28	B phase GAP current
15	29	30	C phase GAP current
16	31	32	A phase capacitor current
17	33	34	B phase capacitor current
18	35	36	C phase capacitor current
19	37	38	A phase line current
20	39	40	B phase line current
21	41	42	C phase line current
22	43	44	Null
23	45	46	Null
24	47	48	Null
25	49	50	Null
26	51	52	Null

Table 6: Anolog Signals

17.7.2.5.6- Power Supply description

17.7.2.5.6.1- Power and Indicator

One DC power supply inputing from the power supply board transforms to three DC power supply through DC/DC convertion, which are electrically isolation and supply stable power supply for each board.

The indicators in the back panel:

- **+5V indicator:** lighting if +5V power supply working normally;
- **24V1 indicator:** lighting if +24V1 power supply working normally;
- **+24V2 indicator:** lighting if +24V2 power supply working normally.

17.7.2.5.6.2- Power supply monitoring interface

The device has the interface to monitor output power of the power supply board, which is used for block signal and alarm signal. Each output power has two independent empty contacts, which are open normally and close if power-off or abnormal.

17.7.2.6- Boards Description

17.7.2.6.1- Power Supply Board

Main technical parameters:

1. **Input voltage:** 220V DC
2. **Output rated power:** 150W;
3. **Power supply monitoring signal:** each output has two empty contacts, which are close if power-off. Contact capacity is 24VDC, 5A/250VAC, 5A.

17.7.2.6.2- Communication Management Board

The main function of communication management board includes:

- exchanging information with other boards in the same box,
- communication with substation monitoring system and remote monitoring terminals,
- sending remote control command,
- receiving clock
- and correcting time for other boards

This board has plenty of communication interfaces.

17.7.2.6.3- Protection Board

The protection board executes control and protection calculation and strategy, outputs protection action command; with 3 optical signal inputs and 6 optical signal outputs for GAP status monitoring and triggering control command.

17.7.2.6.4- Data Process Board

The front panel of DP board has 6 optical signal inputs and 6 optical signal outputs. The optical signal inputs are used for sampling synchronization. The optical signal inputs receive platform measurement data. DP board processes the data received from the platform measure box and sends to protection board and the other boards through internal data bus.

17.7.2.6.5- Digital Input (DI) DI board

The main function of DI board is acquiring and sending digital input signals.

- The 1st to 34st input receives nomal digital signal.
- The 30st to 34st input can complete other special function besides receiving nomal digital signal.
- The 30st input can receive PPS signal and provide PPS pulses for the device. This function should be set before shipment.
- The 31st and the 32 st can receive a temperature signal for temperature meausurement. The function should be used with special temperature measurement circuit board and set before shipment.

17.7.2.6.6- Digital Output (DO) board (Relay output board)

DO board is used to output empty contacts. More than one DO boards can be installed according to the project design. Each DO board maximum outputs 14 empty contacts.

17.7.2.6.7- Digital/Analog (D/A) board (Analog signals output board)

D/A board converts 21 large currents on platform to 4~20ms small currents which are used by independent TFR device.

All these output terminals are defined in **Table 6**.

17.7.3- Measure and Control device (MC-10)

17.7.3.1- Main Technical Indicators

Measure and control device is a 6U standard box and rear plug-in structure, including;

- power supply board,
- communication management board,
- AI board,
- DI board,
- and relay output board.

The device receives the analogy channel data, system status signal; outputs breaker and switch control command; sends status information to the monitoring system. It completes functions of data sampling and control.

The main technical indicators are:

- **Analogy input:** 8*CT+8*PT+6*DC input, maximum 16*CT+16*PT+12*DC input;
- **Digital input:** 68, maximum 170;
- **Relay output:** 28 (dependent empty contacts), maximum 70;
- **Communication mode:** 4 LAN, 4 RS485, 1 RS232 (debugging use only);
- **Communication rate:** Ethernet 100M, self-adaptive;
- **Timing Mode:** IRIG_B(DC)+PPS;
- **Weight:** ≤3kg.

17.7.3.2- Device Structure

Measure and control device uses standard single 6U chassis structure, with a built-in installation on measure and control cabinet. The front panel hole size shown in below Figure 15.

The device has 12 rear plug-in slots. From left to right, there are power supply board, communication management board, DI board, relay output board, AI board (optional).

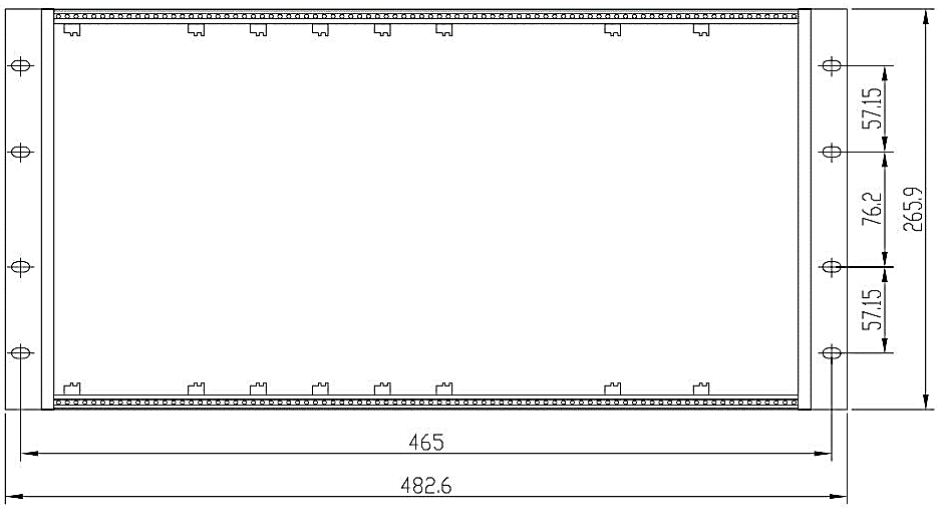

Figure 15: front panel hole size of MC-10

17.7.3.3- Device Front Panel

Then measure and control device front panel is showing as figure 76, which is devided to HMI display area, operation key area and status indicators area, providing local operation and status indication functions.

HMI display and key operation description are detailed in operation manual.

The statusindicator signals include:

- **Running indicator:** flash when the device working normally;
- **Fault indicator:** lights when faults occurring;
- **Alarm indicator:** lights when alarms occurring;
- **Block indicator:** lights when block events occurring.

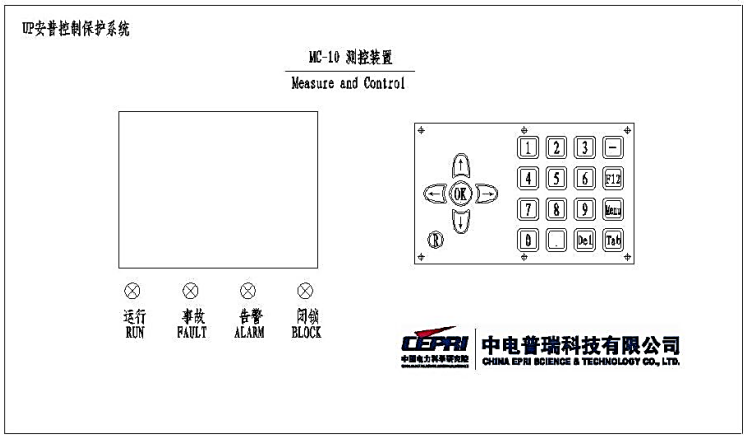

Figure 16: front panel of measure and control device (MC-10)

17.7.3.4- Device Back Panel

The measure and control device back panel is showing in figure 77, including power supply input, power-off monitoring interface, RS485 input interface, RS232 debug interface and LAN communication network interface, digital input, relay output and analogy input interface.

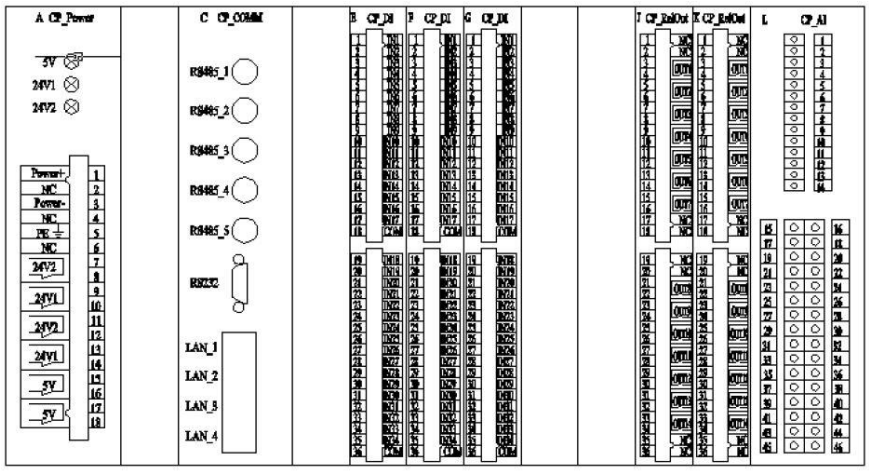

Figure 17: back panel of measure and control device (MC-10)

17.7.3.5- Back panel wiring terminal arrangement

The measure and control device back panel wiring terminal arrangement is shown in Figure 18. It should be noted that according to different SC project design, the measure and control device back panel wiring arrangement may also be adjusted accordingly.

Figure 28 is an example of a FSC project for reference purposes only.

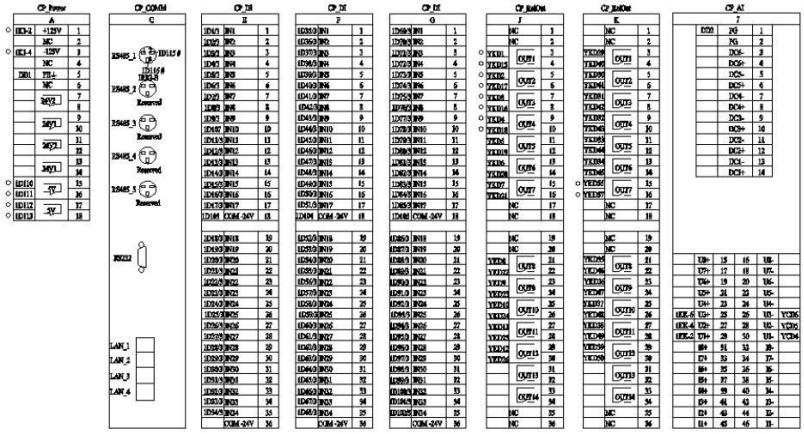

Figure 18: back panel wiring terminal arrangement l of measure and control device

17.7.3.5.1- Communication interface description

17.7.3.5.1.1- RS485

5 RS485 interfaces, from top to bottom each function is assigned as shown in **Table 1**. Three core air pin as defined in **Table 2.**

RS485(from top to bottom)	function description
1	Simplex, receiving IRIG_B (DC) code clock signal
2	Half-duplex communication, communicating with laser power supply device.
3	Half-duplex communication, spare
4	Half-duplex communication, spare
5	Half-duplex communication, spare

Table 1: RS485 function arrangement

air pin	RS485 signal
1.	-
2.	B
3.	A

Table 2: three core air pin's definition

17.7.3.5.1.2- LAN

The function of 4 100M self-adaptive Ethernet/RJ45 interface is showing in **Table 3**.

Electrical Ethernet (from top to bottom)	Function define
1.	Monitoring network A
2.	Monitoring network B
3.	TFR network
4.	HMI network

Table 3: LAN function arrangement

Note: the final definition please refers to the project design

17.7.3.5.2- Digital input signal description

The digital input signals are connected to the empty contacts, passing photoelectric isolation through terminal block and entering to the device. **Signal input filter circuit guarantees a strong anti-interference ability.**

17.7.3.5.3- Relay output signal description

The relay output unit outputs relay contact signals according to the control command. In order to insure the output reliability, each control command output is executed by three relays. Only if the block relay is open and the startup relay acts, the control command can be sent to the output relay. The device has the function of self-check blocking to prevent protection malfunction output induced by hardware damage. **Three output power startup and close sequence of the device can prevent device malfunction when power-on and power-off.**

17.7.3.5.4- Analogy input signal description

17.7.3.5.4.1- DC

Receiving 6 different DC signal, converting to DC voltage by outside converters. The DC voltage range is -5V～+5V or 0~5V.

17.7.3.5.4.2- AC

- 8 AC current channels: rated current 5A/1A, 0～120％rated value;
- 8 AC voltage channels: rated voltage 100V, 0～120％rated value.

Special voltage input range should be declared during design.

17.7.3.5.5- Power Supply description

17.7.3.5.5.1- Power Supply and Indicators

One DC power supply inputing from the power supply board transforms to three DC power supply through DC/DC convertion, which are electrically isolation and supply stable power supply for each board.

The indicators in the back panel:

- **+5V indicator:** lighting if +5V power supply working normally;
- **24V1 indicator:** lighting if +24V1 power supply working normally;
- **+24V2 indicator:** lighting if +24V2 power supply working normally.

17.7.3.5.5.2- Power supply monitoring interface

The device has the interface to monitor output power of the power supply board, which is used for block signal and alarm signal. Each output power has two independent empty contacts, which are open normally and close if power-off or abnormal.

17.7.3.6- Boards description

17.7.3.6.1- Power supply board

Main technical parameters:

1. **Input voltage:** 220VDC veya 110VDC
2. **Output rated power:** 150W;
3. **Power supply monitoring signal:** each output has two empty contacts, which are close if power-off. **Contact capacity** is 24VDC, 5A/250VAC, 5A.

17.7.3.6.2- Communication management board

The main function of communication management board includes:

- exchanging information with other boards in the same box,
- communication with substation monitoring system and remote monitoring terminals,
- sending remote control command,
- receiving clock,
- and correcting time for other boards.

This board has plenty of communication interfaces.

17.7.3.6.3- Digital Input (DI) Board

The main function of DI board is acquiring and sending digital input signals.

- The 1st to 34st input receives nomal digital signal.
- The 30st to 34st input can complete other special function besides receiving nomal digital signal.

- The 30st input can receive PPS signal and provide PPS pulses for the device. This function should be set before shipment.
- The 31st and the 32 st can receive a temperature signal for temperature meausurement. The function should be used with special temperature measurement circuit board and set before shipment.

17.7.3.6.4- Dijital Output (DO) Board (Relay output board)

DO board is used to output empty contacts. More than one DO boards can be installed according to the project design. Each DO board maximum outputs **14 empty contacts.**

17.7.3.6.5- Analog Input (AI) Board

Measure and control system acquires, samples and processes analogy signals, including electrical signals and non-electrical signals. 16 bit AD chips are used for analogy sampling and the sampling frequency is 6.4kHz.

17.7.4- Switch operation device (SO-10)

17.7.4.1- General

Switch operation device receives the switch control command from relay output board, and executes the control.

The main technical indicators are:

- Control mode: three phases
- Contact capacity：0.5~4A;
- Digital input: 32 (24V);
- Relay output: 63;
- Ağırlık: ≤2kg

17.7.4.2- Device Structure

Switch operation device is standard single 6U chassis structure, which panel size is showing as figure 19.

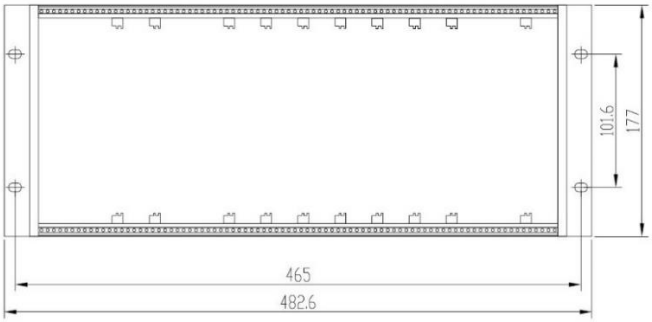

Figure 19: panel size of swith operation device (SO-10)

The box has 10 rear plug-in slots, from right to left, which are one power supply board slot, one control signal input board slot, 7 relay output board slots and one spare slot.

17.7.4.3- Device Front Panel

The front panel of switch operation device is showing as figure 20.

Figure 20: front panel of switch operation device (SO-10)

17.7.4.4- Device Back Panel

The back panel of switch operation device is showing as figure 21. There are power supply input interface, switch control signal input interface and switch control signal output interface.

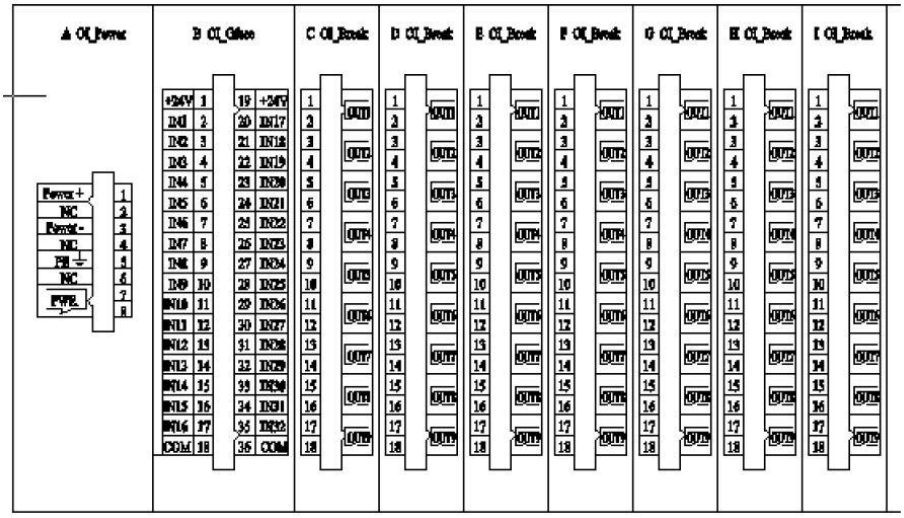

Figure 21: back panel of switch operation device (SO-10)

17.7.4.5- Device back panel wiring terminal arrangement

The switch operation device back panel wiring terminal arrangement is shown in Figure 22. It should be noted that according to different SC project design, the switch operation device back panel wiring arrangement may also be adjusted accordingly. Figure 712 is an example of a SC project for reference purposes only.

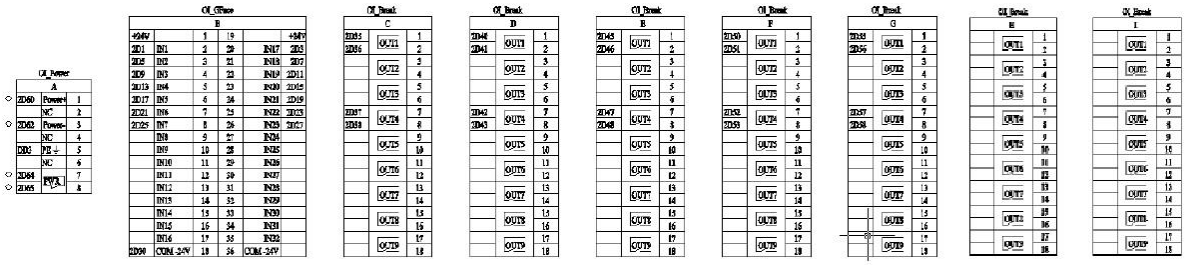

Figure 22: back panel wiring terminal arrangement of The switch operation device (SO-10)

17.7.4.6- Boards description

17.7.4.6.1- Power supply board

Include one 220VDC power supply and one empty contact of power-off monitoring signal relay, closing when power-off.

The terminal board definition is listed in below table:

terminals (from top to bottom)	Signal type	IO type	Function	Parameter
1	Power+	input	positive of Power	220VDC
2	NC			
3	Power-	input	negative of Power	
4	NC			
5	PE		protected earth	
6	NC			
7	Delay Ouput	output	relay output: monitor the power is off or not, it will close if the power is off.	Capacity: 24VDC, 5A; 250VAC, 5A. type: normal close

Table: description of power supply board

17.7.4.6.2- Control input board

The 2th to 17th terminals are 16 empty contacts. The 18th terminal are control input common terminal, controlling the relay action of control input board.

17.7.4.6.3- Relay output board

The relay output board receives **control input command**. Each board has 9 independent relay empty contacts to control switch.

17.7.5- Breaker operation device (BO-10)

17.7.5.1- General

The main function of breaker operation device includes:

1. Switch operation device transfers commands from C&P device or M&C device to switches.
2. Monitor two set C&P devices power supply status. Close bypass breaker when both set are in fault.
3. Output breaker control ciruit status signal.

The main technical indicators:

- **Operation mode:** phase segregated;
- **Contact capacitor:** 0.5 ~ 4A;
- **Digital input:** 19 (24V);
- **Digital output:** 24;
- **Weight:** ≤0.5kg.

17.7.5.2- Device Structure

Breaker operation device is standard single 4U chassis structure, which panel size is showing as figure 23.

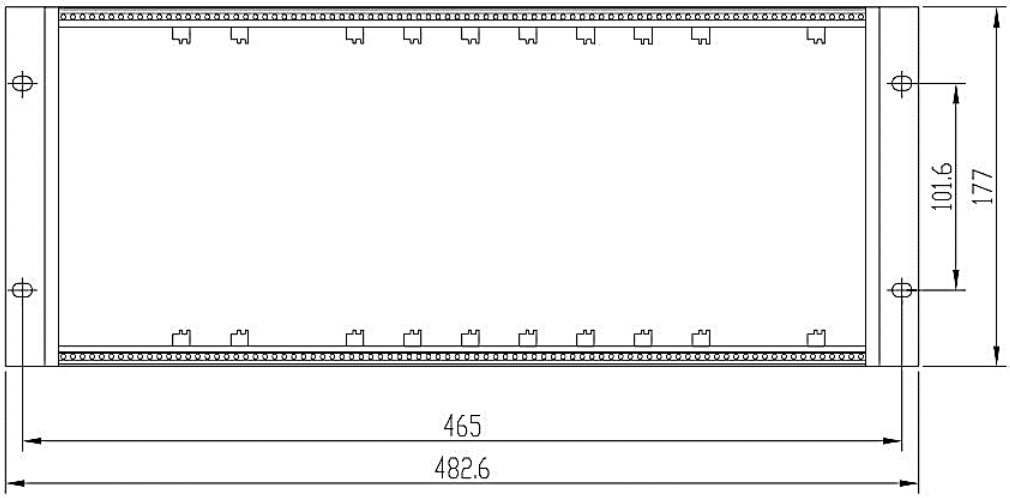

Figure 23: panel size of breaker operation device (BO-10)

The box has 12 rear plug-in slots. From right to left, the first one is power supply board slot. The second one is control signal input board slot, the third one is relay output board slots. The fourth to sixth are phase A, phase B and phase C operation board slots. The twelfth one is double system power failure protection slot. The other five slots are spare slots.

17.7.5.3- Device Front Panel

The front panel of breaker operation device is showing as figure 24.

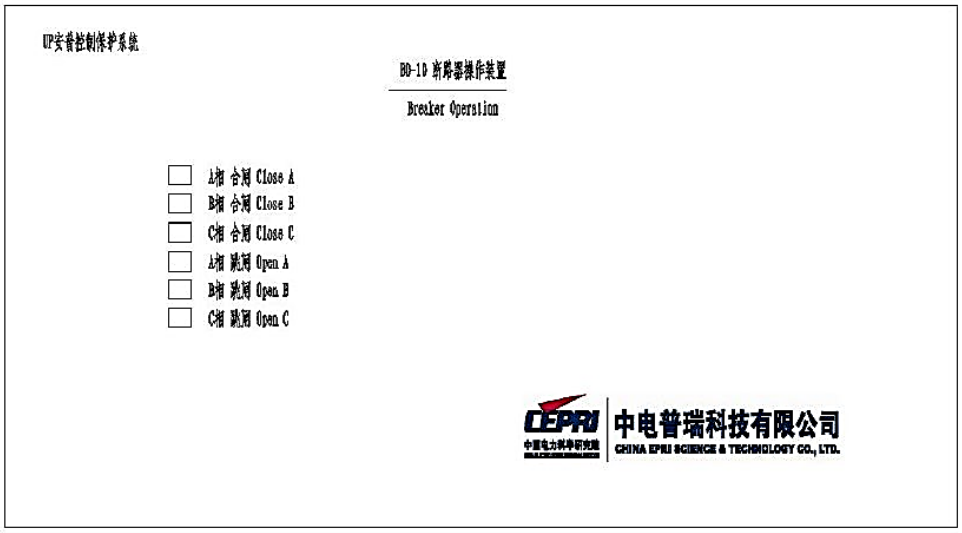

Figure 24: front panel of breaker operation device (BO-10)

There are 6 indicators in the front panel, indicating close and open position of phase A, phase B, phase C breakers. **The indicators light according to the real position.**

17.7.5.4- Device Back Panel Instruction

The back panel instruction of breaker operation device is showing as Figure 25.

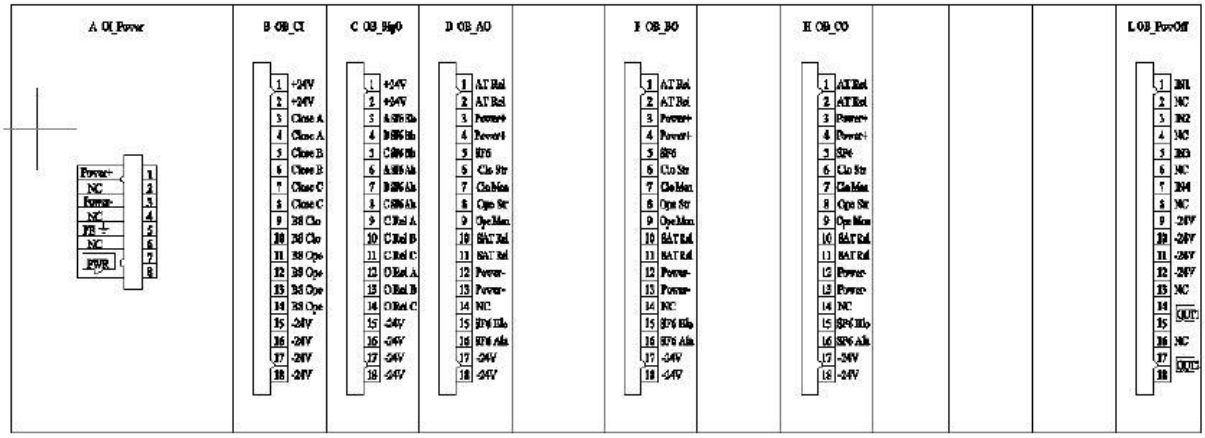

Figure 25: back panel instruction of breaker operation device (BO-10)

The back panel of breaker operation device includes power supply input interface, breaker operation signal output interface, breaker control signal input interface, and breaker control circuit status input interface.

17.7.5.5- Device back panel wiring terminal arrangement

The breaker operation device back panel wiring terminal arrangement is shown in Figure 26. It should be noted that according to different SC project design, the breaker operation device back panel wiring arrangement may also be adjusted accordingly. Figure 26 is an example of a SC project for reference purposes only.

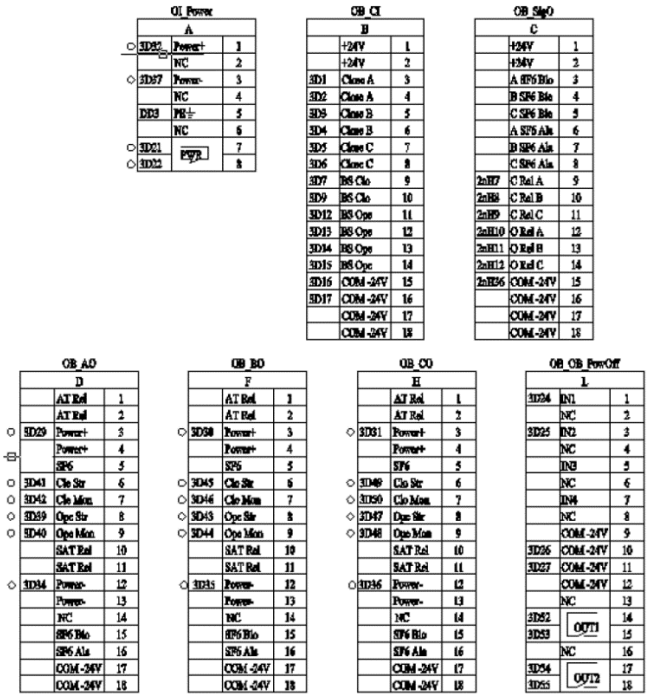

Figure 26: back panel wiring terminal arrangement of breaker operation device (BO-10)

17.7.5.6- Boards description

17.7.5.6.1- Power supply board

The power supply board has one 220VDC power supply input, one power monitoring signal relay empty contact output, closing when power-off. **The terminals are showing in below table:**

terminals (from top to bottom)	Signal type	IO type	Function	Parameter
1	Power+	input	positive of Power	220VDC
2	NC			
3	Power-	input	negative of Power	
4	NC			
5	PE		protected earth	
6	NC			
7	Delay Ouput	output	relay output: monitor the power is off or not, it will close if the power is off.	Capacity: 24VDC，5A; 250VAC，5A. type: normal close

Table: description of power supply board

17.7.5.6.2- Control input board

Five digital command input are used to control breaker phase separately, three phase open, and three phase close. **The control input interface is listed in the below table:**

terminals (from top to bottom)	Signal type	IO type	Function
1	DC24V+	output	DC 24V+
2	DC24V+	output	DC 24V+
3	DI	input	phase A close command
4	DI	input	phase A close command
5	DI	input	phase B close command
6	DI	input	phase B close command
7	DI	input	phase C close command
8	DI	input	phase C close command
9	DI	input	phase ABC close command
10	DI	input	phase ABC close command
11	DI	input	phase ABC open command
12	DI	input	phase ABC open command
13	DI	input	phase ABC open command
14	DI	input	phase ABC open command
15	DC24V-	output	DC 24V-
16	DC24V-	output	DC 24V--
17	DC24V-	output	DC 24V-
18	DC24V-	output	DC 24V-

Table: description of command input

17.7.5.6.3- Signal output board

The signal output board has 12 digital signal output, relay empty contact output and common contact (-24V). **The description of signal output interface is listed in below table:**

terminals (from top to bottom)	Signal type	IO type	Function	Parameter
1	DC24V+	output	DC 24V+	DC 24V+
2	DC24V+	output	DC 24V+	
3	relay output	output	phase A SF6 blocking signal: close is active	Capacity: 24VDC, 5A; 250VAC, 5A。 type: normal open
4	relay output	output	phase B SF6 blocking signal: close is active	
5	relay output	output	phase C SF6 blocking signal: close is active	
6	relay output	output	phase A SF6 alarm signal: close is active	
7	relay output	output	phase B SF6 alarm signal: close is active	
8	relay output	output	phase C SF6 alarm signal: close is active	
9	relay	output	phase A close position signal:	
	output		close is active	
10	relay output	output	phase B close position signal: close is active	
11	relay output	output	phase C close position signal: close is active	
12	relay output	output	phase A open position signal: close is active	
13	relay output	output	phase B open position signal: close is active	
14	relay output	output	phase C open position signal: close is active	
15	DC24V-	output	DC 24V-	DC 24V-
16	DC24V-	output	DC 24V-	
17	DC24V-	output	DC 24V-	
18	DC24V-	output	DC 24V-	

Table: description of signal output

17.7.5.6.4- Operation board

Input: 2 SF6 monitoring signal correspond to breaker alarm and breaker block signals;

- 1 close circuit monitoring,
- 1 open circuit monitoring.

Output: 1 SF6 block signal; 1 close command output;

- 1 open command output;
- 1 anti-pumping contact output.

Operation board A/B/C can not exchange for their dependent function. **The output and input interface is showing in below table.**

terminals (from top to bottom)	Signal type	IO type	Function	Parameter
1 2	relay output	output	relay output: it will close if the breaker is closed. It can be used for anti-pumping contatct output.	capacity: 24VDC，5A; 250VAC，5A。 type：normal open
3 4	DC220V+	input	positive of breaker control power	DC220V+，-15%~10%
5	SF6 blocking signal	output	SF6 blocking signal: low is active	normal: connect to DC220V+ block: connect to DC220V-
6	command output	output	close command output: control the breaker close circuit.	
7	circuit monitor	input	monitor the breaker close circuit: TWJ is reseted when the breaker is closed.	
8	command output	output	open command output: control the breaker open circuit.	
9	circuit monitor	input	monitor the breaker open circuit: HWJ is reseted when the breaker is opened.	
10 11	relay input	input	relay input: it is close if the breaker is closed. It can be used for anti-pumping contatct input.	capacity: 24VDC，5A; 250VAC，5A。 tpye：normal open
12 13	DC220V-	input	negative of breaker control power	DC220V-
14	NC			
15	digital input	input	connected to digital input signal	
16	digital input	input	connected to digital input signal	
17 18	common interface	output	negative of DC24V in this device	both of terminals are connected to negative of DC24V

Table: description of the output and input interface

17.7.5.6.5- Power fail protection board

Input: 4 digital input signal;

Output: 2 dependent empty contact output signal;

The input and output interface of power fail protection board is showing in below table:

terminals (from top to bottom)	Signal type	IO type	Function	Parameter
1	digital input	input	connected to digital input signal	
2	NC			
3	digital input	input	connected to digital input signal	
4	NC			
5	digital input	input	connected to digital input signal	
6	NC			
7	digital input	input	connected to digital input signal	
8	NC			
9	common interface	input	connected to digital input signal's common interface	
10				
11				
12				
13	NC			
14	relay output	output	relay output	capacity: 24VDC，5A; 250VAC，5A。 tpye: normal open
15				
16	NC			
17	relay output	output	relay output: the same as 14/15	capacity: 24VDC，5A; 250VAC，5A。 tpye: normal open
18				

Table: description of the interface of power fail protection board

17.7.6- Laser power supply device (LPS-10)

17.7.6.1- General

The laser power supply device generates and sends laser power to the platform, receives and processes power monitoring information from the platform, monitors laser diode working status and send the monitoring information to C&P device. **The main technical indicator is:**

- **Input power:** 220VDC,maximum power 150W;
- **Rated output optical power:** 3W/phase;
- **Communication interface:** RS485;
- **Input signal accuracy:** 1ms;
- **Timing mode:** IRIG_B (DC) kodu;
- **Weight:** ≤4kg.

17.7.6.2- Device Structure

Laser power supply device is standard single 4U chassis structure, which panel size is showing as below figure 27.

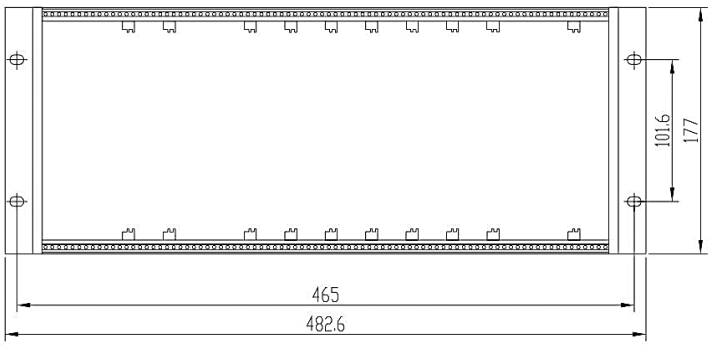

Figure 27: panel size of Laser power supply device (LPS-10)

The box has 6 rear plug-in slots: from right to left, power supply board 2, power supply board 1, laser control board, phase A laser-driven board, phase B laser-driven board, phase C laser-driven board.

17.7.6.3- Device Front Panel

The front panel of laser power supply is showing in figure 28.

Figure 28: front panel of laser power supply device (LPS-10)

The front panel of laser supply device has 6 indicators:

- **Phase (A /B/C) CT power supply (red lights):** lighting if the platform is powered by CT power supply, otherwise closing.
- **Phase (A/B/C) laser power supply (green lights):** lighting if the platform is powered by laser power supply, otherwise closing.

17.7.6.4- Device back panel

The back panel of laser power supply device is showing as figure 29**.**

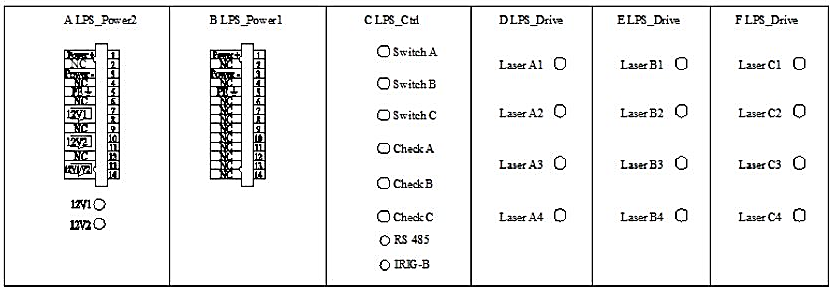

Figure 29: back panel of laser power supply device (LPS-10)

The back panel of laser power supply device includes power supply input interface, power supply status indicator input, 6 optical input signal interface, 2 RS485 communication interface, 12 laser output interface.

1. **Power:** 220VDC input power supply converts to two 12V power supply inside the device;
2. **Power monitoring:** empty contacts stop outputing when 12V power supply is fail;
3. **Indicator:** lighting when 12V power supply works normally;
4. **Switch (A/B/C):** optical signal input, phase A (B/C) platform power supply switching signal;
5. **Chech (A/B/C):** optical signal input, phase A (B/C) laser power supply checking signal;
6. **RS485:** RS485/RS422 level, communication signal;
7. **IRIG_B:** RS485/RS422 level, IRIG_B format DC input;
8. **Lazer A1 ～ A4 (B1 ～ B4, C1 ～ C4):** phase (A/B/C laser power supply output.

17.7.6.5- Device back panel wiring terminal arrangement

The device back panel wiring terminal arrangement of laser power supply device is showing in figure 30.

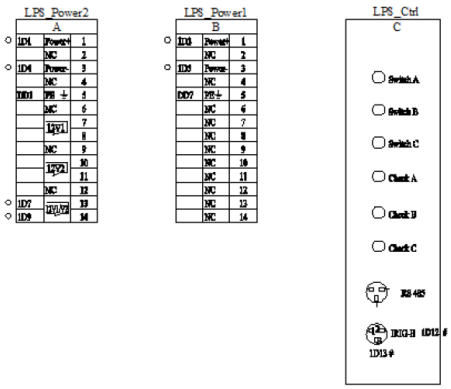

Figure 30: back panel wiring terminal arrangement of laser power supply device (LPS-10)

17.7.6.6- Boards description

17.7.6.6.1- Power Supply A description

The power supply board A inputs power for the device, and outputs a +12V power as the laser-driven power. The power supply board A description is listed in the below table.

terminals (from top to bottom)	Signal type	IO type	Function	Parameter
1.	Power+	input	positive of Power	
2.	NC			
3.	Power-	input	negative of Power	
4.	NC			
5.	PE		protected earth	
6.	NC			
7. 8.	Relay Output	output	relay output: monitor the 12V1 is off or not, it will close if the 12V1 is off.	Capacity: 24VDC, 5A; 250VAC, 5A. type: normal close
9.	NC			
10. 11.	Relay Output	output	relay output: monitor the 12V2 is off or not, it will close if the 12V2 is off.	Capacity: 24VDC, 5A; 250VAC, 5A. type: normal close
12.	NC			
13. 14.	Relay Output	output	relay output: monitor the 12V1/12V2 is off or not, it will close if any of 12V1 and 12V2 is off.	Capacity: 24VDC, 5A; 250VAC, 5A. type: normal close

Table: description of power supply board A

17.7.6.6.2- Power supply B description

The power supply board B is similar to the power supply board A and outputs a +12V power as the device control power. The power supply board B description is listed in the below table.

terminals (from top to bottom)	Signal type	IO type	Function	Parameter
1.	Power+	input	positive of Power	
2.	NC			
3.	Power-	input	negative of Power	
4.	NC			
5.	PE		protected earth	
6.	NC			
7.	NC			
8.	NC			
9.	NC			
10.	NC			
11.	NC			
12.	NC			
13.	NC			
14.	NC			

Table: description of power supply board B

17.7.6.6.3- Laser control board description

Laser control board makes control strategy according to the received phase A, B and C platform power supply information. The laser power supply device status is sent to C&P device through RS485. Receiving IRIG_B (DC) signal is for correcting the device time. **The laser control board interface is listed in below table.**

terminals (from top to bottom)	Signal type	IO type	Function
1.	Optical Signal	input	phase A: switch between CT power and laser power
2.	Optical Signal	input	phase B: switch between CT power and laser power
3.	Optical Signal	input	phase C: switch between CT power and laser power
4.	Optical Signal	input	phase A: laser power check
5.	Optical Signal	input	phase B: laser power check
6.	Optical Signal	input	phase C: laser power check
7.	Electrial Signal	input	receive IRIG_B(DC) code in RS485
8.	Electrial Signal	input/ output	communicate with C&P device in RS485

Table: description of laser control board interface

17.7.6.6.4- Laser-driven board description

Laser-driven board A, B and C supply laser power for phase A, B and C flatform power board separately. **The description is listed in below table.**

terminals (from top to bottom)	Signal type	IO type	Function
1.	Optical Signal	output	No.1 optical power output
2.	Optical Signal	output	No.2 optical power output
3.	Optical Signal	output	No.3 optical power output
4.	Optical Signal	output	No.4 optical power output

Table: description of laser-driven board

17.7.7- Platform measure box

17.7.7.1- General

The platform measure box samples many analogy channels on the high voltage platform simultaneously. The sampled results will be sent to the control center underground.

The main technical indicators of the single phase platform measure box are:

- Sampling maximum 11 AC analogy current channels simultaneously;
- Sampling rate is 12.8kHz;
- The isolation between the current transform board and the optical fiber communication board is more than 2000V;
- The transmission distance of optical communication is more than 300m;
- The input power voltage range is 5.5V～6.5V;
- Protection class: IP54.

17.7.7.2- Platform measure box structure

The front view and side view of platform measure box is showing as figure 31.

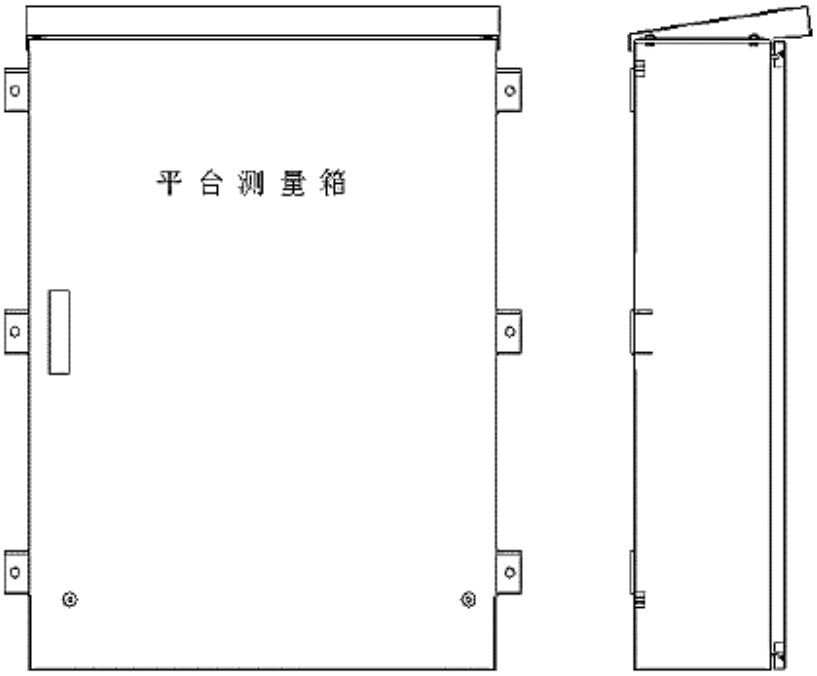

Figure 31: front view and side view of platform measure box

17.7.7.3- Grounding description

The grounding of platform measure box meets the following requirements:

1. The shell of platform measure box connects to the platform solidly.
2. In the inlet side of platform measure box, the shield layer of CT incoming line connects to the ground copper bar. The bellows are contected to the shell of platform measure box.

17.7.7.4- Optical fiber connection description

The optical fiber connection of platform measure box is showing in figure 32 (phase A is as an example, while phase B and C are similar).

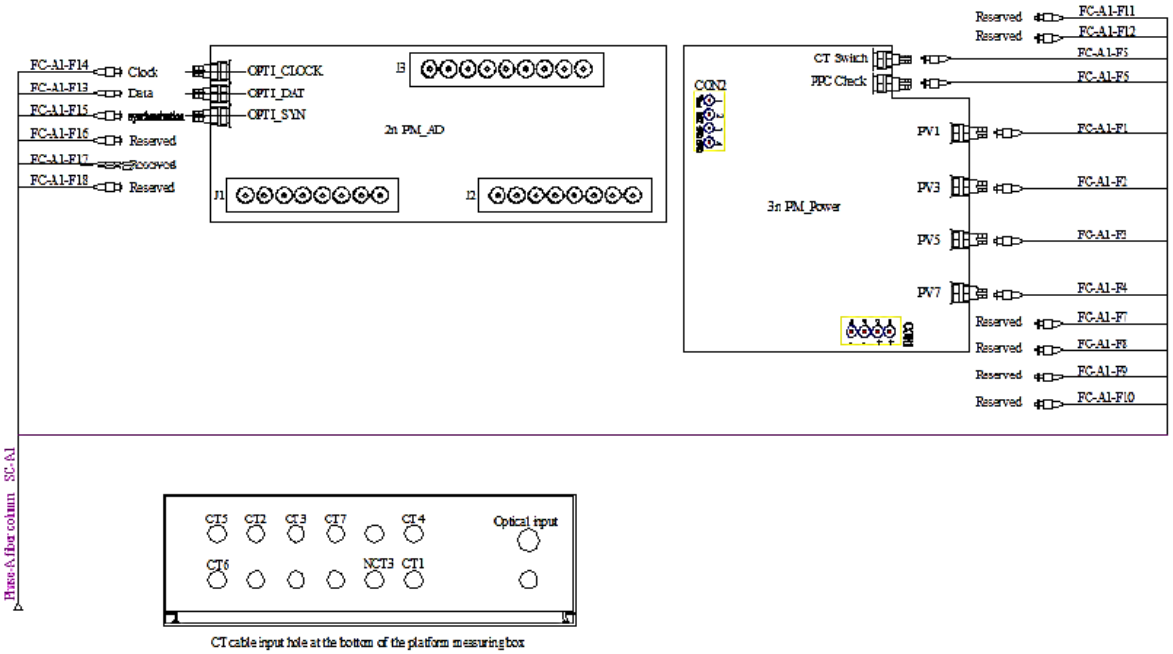

Figure 32: diagram of optical fiber connection of platform measure box

17.8- Device Operation Description

17.8.1- Control and protection device operation description

C&P device HMI uses large LCD screen (**resolution is 640*480**) to display real-time measured value, device status, from which users can send command and set parameters. The human-machine interface (HMI) has **menu and keys** for users' operation

- Press the key **"menu"** to display the main menu, through which users can access to different level sub-menus.
- To access the object menu, use the key **"↑↓←→"** to move the cursor.
- Press the key **"OK"** to enter.
- The key **"←"** is used to enter to the submenu and the key **"→"** is used to return to the previous level menu.

The detailed description please refer to the operation manual.

17.8.2- Measure and control box operation description

M&C device HMI uses large LCD screen (**resolution is 640*480**) to display real-time measured value, device status, single line diagram, from which users can send remote control command and set parameters. The human-machine interface (HMI) has **menus and keys** for users' operation

- Press the key **"menu"** to display the main menu, through which users can access to different level sub-menus.
- To access the object menu, use the key **"↑↓←→"** to move the cursor.
- Press the key **"OK"** to enter.
- The key **"←"** is used to enter to the submenu and the key **"→"** is used to return to the previous level menu.

The detailed description please refer to the operation manual.

17.9- Testing and Maintenance

This section is the basic requirements according to the SC control and protection system. Users should make their own operation and maintenance rules based on the situation and experience.

17.9.1- Preparations for testing

17.9.1.1- Appearance and wiring check

1. Unit looks good, no obvious damage and deformation.
2. **The device hardware configuration, such as labeling and wiring shall meet the suppliers'drawings requirements.**
3. The device terminal block, optical circuits and electrical circuits should be connected correctly and reliably. The labels should be clear and accurate.
4. Switches, buttons, keyboards should be flexible operation.
5. Optical fiber, optical cable and other cable shouldn't be aging, broken, or damaged.
6. Check whether the screw of the platform measured box terminal bar lead is tighten. Whether the optical signal input is connected reliably. Whether the wire number and optical fiber number is in consistent with the drawing.
7. Check whether the optical fiber in the optic fiber adapter and fiber optic cabling is in order. Check whether the optical fiber, cable label is consistent with the drawings.
8. The **platform cable's metal casing** shouldn't be **corrosive**.
9. Check the connection between the current transformer secondary winding and the platform measuring box. Check whether the screw of the platform measured box terminal bar lead is tighten.
10. Check the current transformer secondary circuit grounding and the grounding conditions, which should meet the substations secondary wiring design requirements with no rust and loosening.
11. Check the current transformer shell grounding and the grounding conditions with no rust and loosening.

17.9.1.2- Power supply check

AC and DC power supply quality and connection mode should refer to **relay protection and automatic devices inspection requirements.**

17.9.2- Test Notes

1. Microprocessor-based relay protection test devices used for debugging shall comply with DL/T624 **"microprocessor-based relay test device technical conditions"** requirements.
2. The meters for debugging shall be qualified. Voltmeter should use high resistance meter.
3. Testing circuit wiring should guarantee the electrical quantities in the devices comply with the actual situation. The fault simulation test circuit can be used to carry out the entire group of control and protection devices test.
4. If no special instructions when testing, the applied DC power value are rating value. The testing current and voltage, if no special instructions, should be added from the SC platform measure box voltage and current input terminals.
5. Disconnect the DC power before plug in or pull out components. If the device has AC circuit, prevent AC current loop open when plug in or pull out components.

6. When testers contact with boards or chips, they should use a reliable human anti-static electricity grounding measures to ensure that the testing components will not be damaged by static electricity.
7. The original position and orientation of components should be recorded during testing. The position and orientation should be restored after testing.
8. T During testing, the temporarily shorted or disconnected terminals should be individually recorded and timely restord after commissioning.
9. When using AC power electronic equipment (such as oscilloscopes, stopwatch, etc.) for circuit measurement, the instrument shell should be grounded at the same point as the FSC cabinet, the electronic instrument measuring terminals and the power part should be well insulated.
10. During testing the platform measure box, be careful of the added voltage and current amplitude, avoiding the platform measuring box damage.
11. During the CT test, ensure the primary current loop clamp, the secondary current loop well connected, to avoid an open loop in flow test to damage the device.
12. FSC protection cabinets should have reliable grounding and the grounding resistance should meet the design requirements.
13. The electric iron is not recommended to use during testing. If an electric iron must be used, you should use a special one, which should be grounded at the same point with FSC protection cabinet with FSC.

17.9.3- Operation Notes

This note is only for the guidance of the device operation. Please refer to Chapter 6 for the detailed description of each unit. Based on an accumulated experience, new content may be added.

During the inspection process, notice the following:

1. Check the panel indicators to check whether the device is normal.
2. Check whether the device DC power connector has burn marks, and whether there is a burning smell in the cabinet.
3. Check if there were cobwebs or small animals in the cabinet.
4. Check whether the cabinet is too dry or too wet.
5. Check the cabinets' and the control room's doors are closed, preventing small animals, dust from entering the cabinent, and the humidity rises.

During operation, note:

1. All of the fibers must be inserted correctly. The spare optical channel must be covered with the plastic lid. The metal protective cover connected with the optical fiber must be tightened.
2. During the equipment is in operation, removing, plugging in and pulling out the optical fiber are forbidden. Do not look at laser lighting part directly, avoiding personal injury.
3. There are some parts with dangerous high voltage, incorrect operation may result in electrocution or injury.

During maintenance require attention:

1. Only be spare provided by the manufacturer can be used for hardware replacement.
2. Ask for the manufacturer's suggestion if faults can not be located and eliminated following the user manual.
3. The replaced module should be return to factory for repair.
4. It **should be emphasized** that during maintenance user must not change the board's circuit and back panel wires!

17.9.4- Check items

The detailed check items are listed in below table:

No	check items	installation check	Periodic check		check period	
			check all	check partly	check all	check partly
1.	Appearance and wiring	√	√	√	6 years	1～3 years
2.	platform measure box power supply	√	√	√	6 years	1～3 years
3.	Current Transformer	√	√	√	6 years	1～3 years
4.	optical fiber attenuation	√	√	√	6 years	1～3 years
5.	cabinet power supply	√	√	√	6 years	1～3 years
6.	data sampling and processing device	√	√	√	6 years	1～3 years
7.	input and output interface	√				
8.	laser-driven board	√	√	√	6 years	1～3 years
9.	HMI	√	√	√	6 years	1～3 years
10.	TFR symtem	√	√	√	6 years	1～3 years
11.	Time calibration function	√	√	√	6 years	1～3 years
12.	protection function and setting values	√	√	√	6 years	1～3 years
13.	C&P system and M&C sytem test	√	√	√	6 years	1～3 years
14.	integrated system test	√				

Table: Check items of FSC control and protection system

17.9.5- Protection Acts Treatment

FSC protection action analysis general steps:

1. Inspect all HMI and operator station alarm information, and print.
2. If TFR is triggered and has recorded data, then print TFR waveforms.
3. Record and analysis SC protection cabinet A, B LED status.
4. Analysis of all alarms and TFR curve chronologically.
5. After completing the above steps and confirm that the system is normal, reset the system via operator station or HMI, and re-enter FSC.
6. **If the protection action occurs repeatedly, contact with the manufacturer**

17.10- Transportation and Installation Requirements

17.10.1- Packaging, Transport and Storage

1. Before packing, the movable portion should be fixed;
2. Each device wrapped with waterproof material, and then loaded in the shockproof box;
3. The attached files, accessories and wearing parts should be packed according to the instructions;
4. The packed devices shall be suitable for land, air, water (sea) transport, loading and unloading should obey the package indication;
5. The packed devices storage temperature is -10 ℃ ~ 40 ℃. relative humidity should be less than 80%;
6. During transport, the limit temperature is -25 ℃ ~ 70 ℃and the relative humidity is less than 95%;
7. There shouldn't have the rains and snows with acidic, alkaline or other corrosive and explosive gases;
8. The product tra nsportation requirements should be consistent with the relevant provisions.

17.10.2- Installation

17.10.2.1- Installation and Preperation

1. FSC technology and operation manual;
2. Cabinets layout design drawings;
3. Cabinets and other external circuit connection design drawings;
4. The main equipment and associated electrical position of secondary equipment schematic, layout and related parameters;
5. Fiber splicing equipment, microprocessor-based relay protection tester, multimeter and other installation, testing equipment;
6. construction safety, technology, organizational measures documents.

17.10.2.2- Check before electrify

1. Check the device and the power model parameters are consistent with the order, with particular attention to the DC supply voltage and the TA ratings (5A/1A).
2. One by one check whether the plug-in components are consistent with the specification and drawings.
3. Check power wiring is correct. Before the first application of DCpower, use tools such as multimeter to check if DC short circuit occurs.
4. With a multimeter, check the the secondary circuit TV of cabinets' (or devices') external terminals are not short circuit, and TA secondary circuit is not open.
5. Check all ground terminals' grounding is reliable.
6. If there are faults, fix according to the relevant drawings. If the faults can not be fixed, contact with the manufacturer.

17.10.2.3- Installation Precautions

Cabinets must be grounded. The ground copper bars in the cabinets shall be reliably connected to station ground network.

17.11- Appendix

Appendix 1: Setting Values List

No	Setting Value	Unit	Setting Range	Step	Note
1	Delay for BS fail-to-close protection	s	0.100～3.000	0.001	
2	Delay for BS fail-to-open protection	s	0.100～3.000	0.001	
3	Delay for BS phase disagreement protection	s	0.100～10.000	0.001	
4	Rated current of the capacitor	A	1.000～10000.000	0.001	
5	Delay for capacitor overload alarm	s	0.100～60.000	0.001	
6	Time for re-inserting and resetting for capacitor overload protection	min	1.000～120.000	0.001	
7	Times of allowed re-inserting for capacitor overload protection	time	0～5	1	
8	Time for re-insert SC for capacitor overload protection	min	1.000～120.000	0.001	
9	start-up value for capacitor unbalance protection	A	1.000～10000.000	0.001	
10	Setting for capacitor unbalance alarm	‰	0.005～10.000	0.001	
11	Delay for capacitor unbalance alarm	s	0.100～10.000	0.001	
12	Setting for capacitor unbalance low-setting protection	‰	0.005～10.000	0.001	
13	Delay for capacitor unbalance low-setting protection start-up	s	0.100～10.000	0.001	
14	Delay for capacitor unbalance low-setting protection tripping	min	1.000～60.000	0.001	
15	Setting for capacitor unbalance high-setting protection	A	0.050～10000.000	0.001	
16	Delay for capacitor unbalance high-setting protection	s	0.050～10.000	0.001	
17	Setting for line current monitoring alarm	A	1.000～100000.000	0.001	
18	Delay for line current monitoring alarm	s	0.100～10.000	0.001	

19	Setting for MOV over-current protection	A	1.000～200000.000	0.001	
20	Setting for MOV energy low-setting protection	kJ	100.000～200000.000	0.001	
21	Setting for MOV energy high-setting protection	kJ	100.000～200000.000	0.001	
22	Setting for MOV temperature protection	℃	20.000～200.000	0.001	
23	Setting of re-inserting for MOV temperature protection	℃	20.000～200.000	0.001	
24	Setting for MOV unbalance protection	%	5.000～50.000	0.001	
25	Setting for platform flashover protection	A	1.000～100000.000	0.001	
26	Delay for platform flashover protection	s	0.020～5.000	0.001	
27	Setting for SSR alarm	%	5.000～50.000	0.001	
28	Delay for SSR alarm	s	0.100～10.000	0.001	
29	Setting for SSR protection	%	5.000～50.000	0.001	
30	Delay for SSR protection	s	0.100～10.000	0.001	
31	Time for re-inserting and resetting for SSR protection	min	1.000～120.000	0.001	
32	Times of allowed auto-reinserting for SSR protection	time	0～5	1	
33	Time for auto-reinserting SC for SSR protection	s	1.000～120.000	0.001	
34	Time for auto-reinserting SC for line fault	s	0.200～10.000	0.001	

Note: Setting Range for Current is based on primary value.

Appendix 2: Linking Pieces List

No	Linking pieces	Setting Range	Note
1	BS fail-to-close protection	On/Off	
2	BS fail-to-open protection	On/Off	
3	BS phase disagreement protection	On/Off	
4	capacitor overload alarm	On/Off	
5	capacitor overload protection	On/Off	
6	Capacitor unbalance alarm	On/Off	
7	capacitor unbalance low-setting protection	On/Off	
8	capacitor unbalance high-setting protection	On/Off	
9	GAP delay triggering protection	On/Off	
10	GAP refused triggering protection	On/Off	
11	GAP self-triggering protection	On/Off	
12	Line current monitoring alarm	On/Off	
13	Line tripping SC protection	On/Off	
14	MOV energy low-setting protection	On/Off	
15	MOV energy high-setting protection	On/Off	
16	MOV over-current protection	On/Off	
17	MOV temperature protection	On/Off	
18	MOV unbalance protection	On/Off	
19	Another SC tripping local SC protection	On/Off	
20	Platform flashover protection	On/Off	
21	SSR alarm	On/Off	
22	SSR protection	On/Off	
23	External SSR tripping SC protecton	On/Off	
24	Three-phase bypass mode of BS	On/Off	
25	Automatic reinsertion prohibiting mode for line faults	On/Off	

17.12- Conclusion

This manual is used for engineers with basic knowledge about SC. through this manual, users can generally understand the struction and function of SC control and protection systems, and complete user-level operations follow the device instructions.

If there are any questions about SC control and protection system, get technical supports from marketing@epri.sgcc.com.cn e-mail address.

18- FSC HV EQUİPMENTS OPERATİON&MAINTENANCE MANUAL

18.1- Introduction

In order to make 500kV Fixed Series Compensation (FSC) device operate stably for a long time, and avoid improper operation or maintenance not in time to cause personal injury, equipment damage or operational failure, the users should carry out the operation and maintenance the high-voltage equipments of FSC in accordance with the provisions of this manual strictly.

Control & Protection equipment operation and maintenance requirements are in **"UP Series Fixed Series Compensation (FSC) device Control & Protection Operation and Maintenance Manual."**

18.2- Operation and Monitoring

18.2.1- FSC State

SC State / Switch State	Operation State	Hot Standby State	Maintenance State
Series Disconnector	Close	Close	Open
Series Disconnector's Earthing Switch	Open	Open	Close
Bypass Disconnector	Open	Open	Close or Open
Bypass Disconnector's Earthing Switch (where applicable)	Open	Open	Close or Open
Bypass Switch	Open	Close	Close or Open

Table 2-1 SC- State

18.2.2- Inspection

Inspection Requirements:

Number	Contents
1	Inspection staffs should be in good health.
2	Inspection staffs' dress and protective equipment should meet the safety requirements.
3	Inspection staffs must be two or more.
4	Appropriate safety equipments must be used in accordance with the actual situation when exceptional circumstances inspection.

Table 2-2 Inspection Requirements

Inspection Provisions:

Number	Contents
1	When inspection, inspection staffs should maintain adequate safe distance from live equipment.
2	When inspection, inspection staffs should not be free to change the temporary security fence, and not be allowed to remove or across the permanent fence.
3	When night inspection, inspection staffs should turn on the lightings of equipment area and bring lighting tools.
4	Inspection staffs should be careful to prevent the excessive vibration, when opening or closing the door.
5	It is prohibited to carry and use all kinds of mobile communication tools in Relay chamber.
6	Inspection staffs must wear the helmets when going into the device area.
7	Inspection staffs should carry on the defect management system regulations when finding defects and abnormal.
8	Prohibit changing maintenance site security measures and maintenance device status.
9	When SC is in the state of running or hot standby, inspection staffs must not inspect or check on the bypass switch operating platform, and if in case of accident and need inspect or check on the bypass switch operating platform, inspection staffs need wear shield clothes.
10	After SC is put into operation, Inspection staffs are not allowed to open the fence door and go into the fence.
11	Inspection staffs shall not be forcibly crossed five-prevention blocking system to operate the switch device.

Table 2-3 Inspection Provisions

18.2.2.1- Regular inspection items

1. The appearance shall be inspected comprehensively for all equipments, and the meter, instructions, handle and so on shall be inspected for all equipments.
2. The regular inspection must be recorded, analysis and compared, once the abnormal situation occurred, FSC should be quit to repair and maintenance. The weak parts of equipments should be inspected carefully.
3. Check the protective measures of fire, small animals, and anti-misoperation devices.
4. Regular inspection items and cycle are shown in Table 2-4.

Regular inspection items and cycle:

Inspection items	Inspection cycle	Device Name
Appearance inspection	Per day	Bypass Switch
Pressure value inspection	Per day	
Mechanism housing inspection	Per half year	
Mechanism operation times inspection	Per month or after switch operation	
Infrared inspection	Per week	
UV inspection	Per month	
Heaters inspection	Per month	
Appearance inspection	Per day	Disconnector
Mechanism housing inspection	Per half year	
Infrared inspection	Per week	
UV inspection	Per month	
Heaters inspection	Per month	
Appearance inspection	Per day	Capacitor bank
Current inspection	Per day	
Infrared inspection	Per week	
UV inspection	Per month	
Appearance inspection	Per day	MOV
Infrared inspection	Per week	
UV inspection	Per week	
Appearance inspection	Per day	Spark GAP
Infrared inspection	Per week	
UV inspection	Per month	
Appearance inspection	Per day	Damping resistor
Infrared inspection	Per week	
UV inspection	Per month	
Appearance inspection	Per day	Damping reactor
Infrared inspection	Per week	
UV inspection	Per month	
Appearance inspection	Per day	CT
Infrared inspection	Per week	
UV inspection	Per month	
Appearance inspection	Per day	Other equipments (Tube buses, leads, connectors, equipment foundations, equipment frame, ground fences, etc.)
Infrared inspection	Per week	
UV inspection	Per month	
Appearance inspection	Per day	Control & Protection system
Fire blocking inspection	Per month	

Table 2-4 Regular inspection items and cycle

18.2.2.2- Special inspection items

1. When it is windy, check whether there is sundries which affects devices running on the platform.
2. If the equipment discharges to the platform, the platform and equipments on the platform need to be maintained, and the discharge points must be found.
3. If the equipment discharges or is polluted seriously, FSC must be quit to clean and maintain.

18.2.3- Monitoring

Teleindication information and telemetering information are viewed by monitoring system. After fault signal are found, the measures should be taken immediately, and the fault should be eliminated.

18.3- Equipment Maintenance

18.3.1- Safety Precautions

18.3.1.1- Local electrical safety regulations should be performed..

18.3.1.2- When the inspection or maintenance needs to be carried out on FSC platform, the safety measures must be taken reliably.

18.3.1.3- When the inspection or maintenance need to be carried out on SC platform which near the live power lines, the equipment insulate with the platform should be earthing connected reliably to prevent electrostatic damage.

18.3.1.4- No throwing the tools or equipments when operating on the platform.

18.3.1.5- When the capacitors are inspected or be maintenance, the capacitor casing or tubular bus-bar cannot be treaded, and before the capacitors need to be checked or replaced, the capacitor need be short-circuited and grounded one by one.

18.3.1.6- Prohibit relying on the platform fence.

18.3.2- Regular Maintenance

Routine maintenance means that the equipment can carry on appearance or surface treatment, in order to make the equipment performance achieve to optimal, and prolong the service life of the equipment.

Items, cycle and requirements of conventional maintenance:

No.	Content	Regulation
1	If the insulators and conductive parts need to clean, you can dry-clean or clean according to the degree of dirt.	Per year
2	Grease the bearing connection part	Per year
3	Inspect the fastening situation of the platform connection structure with torque wrench, and inspect the tightness of the composite insulator.	Once after operation one year then once per 5 years
45	Inspect the corrosion degree of the platform steel structures. Clean and brush the anti-oxidation primers and paint on the damage parts of the galvanized layer.	Per 3 years
Note: do not grease the broken part.		

Tabke.3-1 Items, cycle and requirements of conventional maintenance

18.3.3- Test ıtems, Cycle and Requırements of Electrıcal Equıpment Preventıve test

18.3.3.1- Introduction

1. According to the equipment maintenance program, electrical equipment should carry on preventive test regularly, which can find problems early, and can prevent equipment failure or cause unplanned outages during operation.

2. The complete archival records of preventive test results should be established.

3. Test results should be compared with previous test results, according to the patterns and trends of changes, the judgments can be made after the comprehensive analysis.

4. When the withstand voltage tests carry on, the equipments linked together should be tested separately, but the same test voltage equipments can be tested together. Some different test voltage electrical equipments which have separate test records in a separate test, the test which is difficult in a separate, may be tested together, at this time, the test voltage should use the minimum test voltage of connected devices.

5. When the rated voltage of electrical equipment is different from the actual working voltage, the test voltage shall be determined according to the following principles:

- When the higher rated voltage equipment is used to enhance the insulation, test voltage shall be determined in accordance with the rated voltage of the equipment.
- When the higher rated voltage equipment is used as an alternative device should be used in accordance with the actual, test voltage shall be determined by rated working voltage.
- When the higher rated voltage equipment is used to meet the requirements of high altitudes, test voltage shall be determined by rated working voltage which is used at the installation site.

6. When various tests related to temperature and humidity (such as the measurement of DC resistance, insulation resistance, tan δ, leakage current and so on)are carrying on, the test products temperature and its ambient air temperature and humidity shall be measured at the same time. When the insulation test is carrying on, the test product temperature should not fall below + 5 ℃, and when the outdoor test is carrying on, the air relative humidity should be no higher than 80%.

7. If the live measure and the on-line monitoring techniques can be proven that achieve power test results by actual use, the blackout test cannot be done or the test cycle can be extended appropriately.

8. When this manual executes, the region or the company's implementation procedures can be formulate according to specific situation.

18.3.3.2- Capacitor test

Test items, cycle and requirements of capacitor:

No.	Items	Cycle	Requirements	Remarks
1	Capacitor bank bridge capacitance measurement	Per 2 years or when necessary	Capacitance deviation value of each bridge does not exceed the value of the initial unbalanced current setting value requirements.	——
2	Capacitor unit capacitance measurement	1) After operation one year 2) Per 2 years or when necessary (Determined according to unbalanced current)	Capacitance deviation value does not exceed ± 3% of the factory value.	——
3	Oil leakage and other appearance inspection	When necessary	When leaking oil or other abnormalities, stop using.	——

18.3.3.3- MOV Test

Test items, cycle and requirements of MOV:

No.	Items	Cycle	Requirements	Remarks
1	Insulation resistance measurement	When necessary	The insulation resistance should not be less than 2500MΩ	Using 2500V megohmmeter measure
2	Reference voltage of DC 1mA(U_{1mA})	When necessary	Compared with the manufacturer factory test value, the change of the measured values of U_{1mA} is not greater than ± 5%	——
3	Leakage current under $0.75U_{1mA}$	When necessary	Leakage current of $0.75U_{1mA}$ not exceeding the specified value by the manufacturer	——
Note: Check leakage current under DC_{1mA} (it can be adjusted according to the equipment characteristics) and reference voltage U_{1mA} and 0.75 U_{1mA} with direct-current high voltage generator. High voltage generator inspection MOV DC_{1mA}. When measuring the end of the test together with the rest of the voltage limiter in parallel to solve, if the voltage is higher, you also need to take the insulation and isolation measures (such as epoxy board isolation, etc.) in a high voltage is applied around the end.				

Table 3-3 Test items, cycle and requirements of MOV

18.3.3.4- Spark GAP Test

Test items, cycle and requirements of GAP:

No.	Items	Cycle	Requirements	Remarks
1	The voltage dividing capacitors oil leakage inspection and capacitance measurement	Per 2 years or when necessary	Calculate equalizing capacitor divider ratio by measuring the capacitance value, and compare with the original calculated value. Readjust the gap distance if the dispersion exceeds 5%.	Using Bridge method or special instrument measures
2	Trigger pipe insulation resistance measurement	Per 2 years	The insulation resistance should not be less than 2500MΩ	Using 2500V megohmmeter measure
3	Trigger tube flashover discharge voltage detection	When necessary	Record trigger tube discharge voltage, compared to the factory value, the discharge voltage deviation does not exceed the rated value	——
4	discharge gap distance inspection	Per 2 years or when necessary	Compliance with the specification of manufacturer	——
5	Insulation resistance measurement	Per 2 years or when necessary	The insulation resistance of the post insulator and the insulating bushing should not be less than 500MΩ	Using 2500V megohmmeter measure
6	Limiting resistor value measurement	Per 2 years or when necessary	Compliance with the specification of manufacturer	——
7	Trigger circuit test	Per 2 years or when necessary	Reliably trigger	From the protection exports to the pulse transformer exports.
8	Voltage synchronous circuit inspection	Per 2 years or when necessary	Compliance with the specification of manufacturer	——
9	Bushing capacitance measurement	Per 2 years or when necessary	Compliance with the specification of manufacturer	——
Note 1: The self-discharge test for trigger tube is carried on using AC or DC voltage generator voltage generator. During the test, untie the electrical connection of the trigger tube and other components. Note 2: The voltage synchronous circuit is connected to 50Hz AC voltage, and does the ignition test. When voltage is lower than the trigger threshold voltage value, triggering device shall not ignition reliably, and when voltage is higher than the trigger threshold voltage value, triggering device shall ignition reliably when do the ignition test.				

Table 3-4 Test items, cycle and requirements of GAP

18.3.3.5- Damping Device Tests

1. Damping Resistor Test

Test items, cycle and requirements of damping resistor:

No.	Items	Cycle	Requirements	Remarks
1	Visual inspection of all components	Per 2 years or when necessary	Appearance is in good without damage	——
2	Insulation resistance measurement	Per 2 years or when necessary	Not be less than 500MΩ	Using 2500V megohmmeter measure
Note: Test equipment and methods of the leakage current under DC $_{1mA}$ and reference voltage U_{1mA} and 0.75 U_{1mA} of MOV in Damping device should be according to MOV test execution.				

Table 3-5 Test items, cycle and requirements of damping resistor

2. Damping Reactor Test

Test items, cycle and requirements of damping reactor:

No.	Items	cycle	requirements	remarks
1	Visual inspection	When necessary	Appearance is in good without damage	——
2	Winding DC resistance measurement	When necessary	1) Measurements should be carried out in all positions on each tap 2) Compare with the original value, the deviation does not exceed ±2%	Measuring damping reactor should stay away from strong magnetic field source, reactor winding temperature and environmental temperature should be basically balanced resistance measurements shall be converted to 75 ℃
3	Winding inductance measurement	when necessary	Compare with the original value, the deviation does not exceed ±5%	Using the impedance measurement

Table3-6 Test items, cycle and requirements of damping reactor

18.3.3.6- Bypass switch Test

Test items, cycle and requirements of Bypass switch:

No.	Items	Cycle	Requirements	Remarks
1	SF6 Gas Moisture Detection	1) After operation one year(2 years without abnormal) 2) When necessary	After Overhaul：<=150μL/L Operating：<=300μL/L	When necessary, e.g.: 1) Abnormal equipment 2) Equipment gas leakage
2	The main circuit resistance measurement	Per 2 years or when necessary	Compare with the original value, the deviation does not higher 120%	Using DC voltage drop method, the current is not less than 100A
3	Opening, closing coil operating voltage test	Per 2 years or when necessary	Opening/closing coil should be action within the range of 65% to 110% of its rated power source voltage reliably, and when the voltage is 30% of the rated supply voltage or less, opening/closing coil should not be action.	——
4	Fracture withstand voltage test	After Overhaul or when necessary	AC withstand voltage or impulse test voltage is 80 % of the factory test voltage.	——
5	Auxiliary circuit and control circuit insulation resistance check	Per 2 years or when necessary	The insulation resistance is not less than 2MΩ	Using 1000V megohmmeter
6	Auxiliary circuit and control circuit withstand voltage test	Per 2 years or when necessary	The test voltage is 2kV	Can be instead of 2500V megohmmeter
7	SF6 density monitor (including setting value) inspection	Per 2 years or when necessary	Compliance with the specification of manufacturer	——

Table 3-7 Test items, cycle and requirements of Bypass switch

No.	Items	Cycle	Requirements	Remarks
8	Gauge calibration (or adjust), institutional pressure setting value verification	When necessary	Compliance with the specification of manufacturer	It is suitable for pneumatic and hydraulic mechanism. Pneumatic mechanism should check all level air pressure setting value (pressure reducing valve and mechanical safety valve)
9	Leakage check of the hydraulic actuator	When necessary	Compliance with the specification of manufacturer	It should be carried out in the opening and closing position respectively
10	Inspection running time of pressure and the pressure from zero and the spring energy storage	Per 2 years or when necessary	Compliance with the specification of manufacturer	——
11	SF6 gas leakage test	After Overhaul or when necessary	Leakage rate per year is not more than 1% or Compliance with the specification of manufacturer	Topical bandage leak test, each sealing parts after dressing lasted 5h, measured SF6 gas content (volume fraction) is not greater than 3×10^{-6}
12	Opening, closing coil DC resistance test	After replacing the coil	Compliance with the specification of manufacturer	——
13	Speed characteristics test	After Overhaul or when necessary	Measurement methods and results should meet the specification of manufacturer	It does not test without manufacturer requirements
14	Time parametric test	After Overhaul or when necessary	1). Opening time, closing time, Mating time of main and auxiliary contacts should be compliance with the specification of manufacturer. 2) Unless otherwise specified by the manufacturer, the same period of opening and closing should meet the following requirements: The different time of closing between phases is not more than 5ms The different time of opening between phases is not more than 3ms The different time of closing in the same phases is not more than 3ms The different time of opening in the same phases is not more than 2ms	It is carried on under the rated operating voltage.
15	Operating mechanism under opening, re opening operating pressure (pneumatic, hydraulic) dropped value check	After Overhaul or when necessary	Compliance with the specification of manufacturer	It is suitable for pneumatic, hydraulic mechanism

No.	Items	Cycle	Requirements	Remarks
16	operation characteristics test of Low oil pressure automatic reclosing lockout, closing lockout, open and close lockout, SF6 gas pressure low alarm, open and close lockout characteristics test of lockout, jumping and prevent anti-phase closing and other auxiliary control device operating	After Overhaul or when necessary	Compliance with the specification of manufacturer	——

Table 3-7 Test items, cycle and requirements of Bypass switch

18.3.3.7- Current Transformer (CT) Test

Test items, cycle and requirements of CT:

No.	Items	Cycle	Requirements	Remarks
1	Winding insulation resistance measurement	Per 2 years or when necessary	Insulation resistances between the windings and winding to ground are not less than 100MΩ	Using 1000V megohmmeter measure
2	Ratio inspection	When necessary	Match with the manufacturer's nameplate signs.	——
3	Visual inspection	When necessary	Appearance is without damage, without exception	——

Table 3-8 Test items, cycle and requirements of CT

18.3.3.8- Insulator Test

1- Test items, cycle and requirements of post insulator:

No.	Items	Requirements	Requirements	Remarks
1	Ultrasonic inspection	Per 2 years or when necessary	Without damage	——

Table 3-9 Test items, cycle and requirements of post insulator

2- Test items, cycle and requirements of composite insulator:

No.	Items	Requirements	Requirements	Remarks
1	Visual inspection	When necessary	Whether Umbrella skirt embrittlement, with electrical burns or not	——
2	Insulators AC voltage test	Operating when replacing the insulator of the main equipment	Meet the requirements of insulation	——

Table 3-10 Test items, cycle and requirements of composite insulator

18.3.3.9- Optical Fiber Column Test

Test items, cycle and requirements of fiber column test:

No.	Items	Requirements	Requirements	Remarks
1	Visual inspection	when necessary	There should be no damage in external insulation fiber column	——
2	Tightness inspection	Per 2 years or when necessary	In addition to its own gravity, the fiber column is not withstand another rally	——
3	Insulation resistance measurement	Per 2 years or when necessary	Insulation resistance should not be less than 500MΩ	Using 2500V megohmmeter measured

Table 3-11 Test items, cycle and requirements of fiber column test

18.3.3.10- Disconnector (Earthing) test

Test items, cycle and requirements of disconnector (earthing) test:

No.	Items	Requirements	Requirements	Remarks
1	Resistance check of secondary circuit	Per 2 years or when necessary	More than 2 MΩ.	Using 1000V megohmmeter measure
2	Power frequency withstand voltage test	When necessary	Insulation resistance should meet the requirements before and after test.	——
3	Lowest voltage operation test of operation coil	When necessary	The lowest operation voltage is 80% of operation power source	——
4	Resistance of contact head (main)circuit	When necessary	Less than 1.5 times of the factory values	——

Table 3-12 Test items, cycle and requirements of disconnector (earthing) test

18.4- Appendix: Preventive Test Tables

Appendix A provides SC main equipments preventive test tables, and which are not listed in could be performed in accordance with the list of equipment. Test records Tables should indicate the series capacitor compensation device line classes, phase classes and components number of SC, test temperature, test humidity, date, time, and test person, recording person and so on.

Preventive tests records tables are shown in Table A.1~ Table A.7.

Table A.1 capacitor test

No.	Capacitor No.	Measure capacitance μF	Factory correction capacitance μF（25℃）	Visual inspection	Conclusion
1					
2					
3					
4					
5					
6					
7					
8					
9					
10					
11					
12					

Table A.2 MOV test

No.	MOV No.	DC 1mA and Reference voltage U_{1mA}			Leakage Current under DC0.75U_{1mA}			Conclusion
		On-site measurements value U_{1mA1} （kV）	Factory test value U_{1mA2}（kV）	Change ratio（%） (U_{1mA2} - U_{1mA1}) / U_{1mA2}	On-site measurement value（μA）	Factory test value（μA）	Factory specified value（μA）	
1								
2								
3								
4								

Table A.3 GAP test

No.	Items		Value comparison of test items		Requirements or judgment basis	Conclusion
			Measured values	Factory specified value		
1	Dividing capacitors leakage check				Calculate equalizing capacitor divider ratio by measuring the capacitance value, and compare with the original calculated value. Readjust the gap distance if the dispersion exceeds 5%	
	Dividing capacitors capacitance measurement and calculation of voltage division ratio	Capacitance value				
		Ratio (%)				
2	Trigger bushing insulation resistance				The insulation resistance should not be less than 2500MΩ	
3	Trigger bushing flashover discharge voltage				Compared to factory value the discharge voltage deviation does not exceed the rated value	
4	Inspection discharge gap distance				According to the manufacturer requirements	
5	Insulation Resistance				Insulation resistance of post insulator and insulating bushing should not be less than 500MΩ.	
6	Limiting resistor value				According to the manufacturer requirements	
7	Trigger circuit test				Reliable trigger	
8	Voltage synchronous circuit Inspection				According to the manufacturer requirements	
9	Bushing capacitance measurement				According to the manufacturer requirements	

Table A.4 Damping resistor test

No.	Items	Instruction	Description		Conclusion
1	Visual inspection of all parts.	Whether the damaged or abnormal	□Yes □No		
2	Measurement under DC U_{1mA}	Measurement value		In the range of ± 5%	
		Factory value			
		Range			
3	Leakage current measurement	Measurement value		No greater than	

Table A.5 Damping reactor test

No.	Items	Instruction	Description		Conclusion
1	Visual inspection of all parts.	Whether the damaged or abnormal	□Yes □No		
2	DC resistance measurement	Measurement value		In the range of ± 2%	
		Factory value			
		Range			
3	Frequency inductance value measurement	Measurement value		In the range of ± 5%	
		Factory value			
		Range			

Table A.6 CT test

No.	Items	Instruction	Description		Conclusion
1	Visual inspection of all parts.	Whether the damaged or abnormal	□Yes □No		
2	Winding insulation resistance	No less than 500MΩ.	Measurement value: MΩ		
3	Insulation resistance of the shield wire for SC platform	No less than 500MΩ。	Measurement value: MΩ		
4	Ratio measurement	Measurement value		According with the nameplate	
		Factory value			

Table A.7 Fiber column test

No.	Items	Instruction	Description	Conclusion
1	Visual inspection of all parts.	Whether the damaged or abnormal	□Yes □No	
2	Insulation resistance measurement	No less than 500MΩ	Measurement value MΩ	
3	Tightness inspection	In addition to its own gravity, the fiber column do not withstand another pull tension		

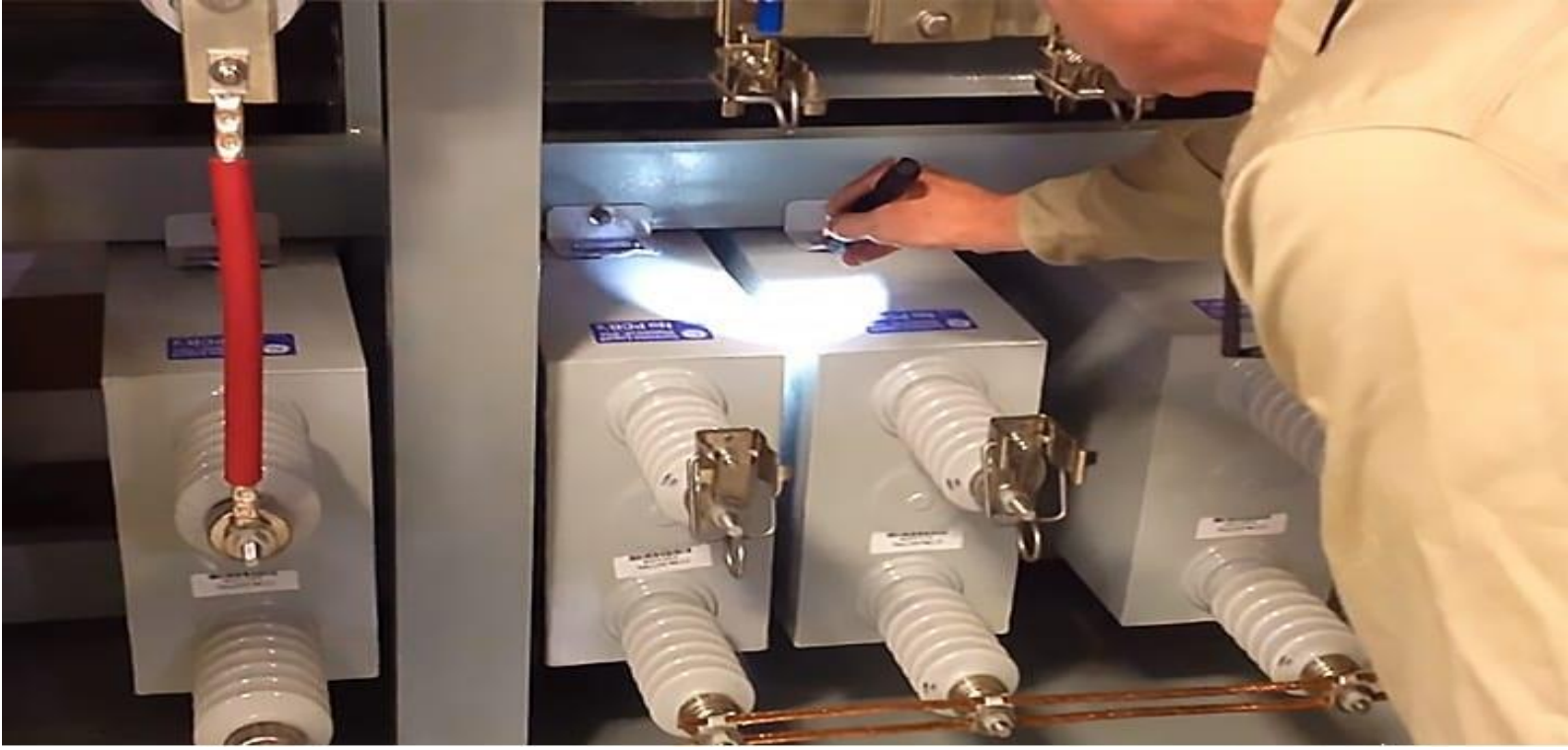

19- FSC CAPACITOR BANK INSPECTION & MAINTENANCE MANUAL

19.1- Introduction

Capacitor banks do need maintenance…

Capacitor banks generally require very little maintenance because they are static type of equipment, but don't be fooled by this statement!

Capacitors are well known for their dangerous reaction when something goes wrong

Standard safety practices should be followed during installation, inspection, and maintenance of capacitors.

Additionally, there are procedures **that are unique to capacitor banks** that must be followed to protect field operators and equipment in accordance with the NESC – National Electrical Safety Code.

Ok! Let's describe **eight most important practices in inspection and maintenance** of capacitor banks:

19.2- Clearance and Grounding

After a capacitor bank is de-energized, **there will be residual charges in the units**. Therefore, wait **at least 5 min** before approaching it to allow sufficient time for the internal discharge resistors in each capacitor unit to dissipate the stored energy

These resistors are designed to reduce the voltage across the individual capacitor units **to less than 50 V within 5 minutes**.

!!! *However, the grounding leads should be applied* ***to all three phases to short out and ground the capacitor bank****. On larger substations, permanent grounding switches may be used to achieve this function****.***

Even after grounding, it is recommended that individual capacitor units be shorted and grounded before personnel come into contact with them to ensure that no stored energy is present.

19.3- Bulged Capacitor Units

One of the failure modes of capacitor units is **bulging**. Excessively bulged units indicate excessive internal pressure caused by overheating and generation of gases due to probable arcing condition. These units should be handled carefully.

The manufacturer should be consulted regarding the handling of bulged units!

Damaged Internally Fused Capacitor Units:

Figure 1: Damaged Internally Fused Capacitor Units

19.4- Leaking from Capacitor Units

Another mode of failure in the capacitor bank is leaking due to the failure of the cans.

When handling the leaking fluid, avoid contact with the skin and take measures to prevent entry into sensitive areas such as eyes

Handling and disposal of capacitor insulating fluid should comply with state, federal, and local regulations.

"Some capacitor units contain **combustible liquid and require careful handling.**"

19.5- Re-Energization of the Capacitor Banks

When returning to service, verify that **all ground connections that were installed for maintenance purpose are removed**.

Allow a minimum of 5 min between de-energization of the capacitor bank and re-energization of the capacitor bank to allow enough time for the stored energy to dissipate.

Exploded and Burnt capacitors:

Figure 12: Burnt capacitors (photo credit: Wenxia Sima, Mi Zou 1, Qing Yang, Ming Yang and Licheng Li)

19.6- Initial Inspection Measurements and Energization Procedures

During the initial inspection before energization of the capacitor banks the following measures should be taken:

Measure#1: Verify proper mechanical assembly of the capacitor units, clearances as per the electrical code, and soundness of the structure of all capacitor banks.

Measure#2: It may be useful to measure the capacitance of the banks and keep the measurements as benchmark data for future comparison.

Measure#3: Check the electrical connections for proper installation and good electrical contact. Verify that all terminal connections are tightened properly.

Check the individual fuse connections to ensure that they are tight and make good contact

Measure#4: KondansatörleriClean all insulators, fuses, and bushings to prevent the possibility of dirty porcelain creating a **flashover danger**. Inspect all porcelain insulators for cracks or breaks**.**

Measure#5: Test the operation of all controls and load break, disconnect, and grounding switches prior to energizing the capacitor banks.

Measure#6: Prior to energizing the bank, verify the capacitance values of each phase and compare them with the coordination values used in the relay settings.

"The capacitance unbalance should not result in a **voltage of more than 110% of the rated voltage on any one unit"**

Measure#7: Immediately after energization, verify the voltage increase on the terminals and compare it with the calculated values.

Also, measure and verify if the supply voltage, phase currents, and the **kVAR of the capacitor bank** are within the allowed limits**.**

Approximately **8 h after energization**, **conduct a visual inspection** of the bank for blown fuses, bulged units, and proper balance in the currents**.**

19.7- Periodic Inspection, Measurement, and Maintenance

The substation and distribution capacitor banks should be inspected and electrical measurements be made periodically.

The frequency of the inspection should be determined by local conditions such as **environmental factors and type of controller** used to switch the capacitors on and off.

19.8- Visual Inspections

Visual inspection of the capacitor bank must be conducted for blown capacitor fuses, capacitor unit leaks, bulged cases, discolored cases, and ruptured cases.

Figure 13: Capacitor photo from kayseri capacitor bank project

During such inspection, **check the ground for spilled dielectric fluid**, dirty insulating surface on the bushings, signs of overheated electrical joints, open switches, and tripped protective devices.

An infrared camera is very useful for inspecting the substation equipment for overheated joints and surfaces, and records can be maintained for future reference. Pole-mounted capacitor units should be examined for exterior corrosion.

19.9- Physical Inspection and Measurements

Physical inspection and measurements should include loose connections, overheated lead wires, and faulty fuse tubes.

Fuses should be inspected for evidence of overheating or other such damage. The protection devices should be inspected for proper settings including the position of the current transformer and the potential transformer.

The capacitance of the bank should be measured and compared with the previous measurements.

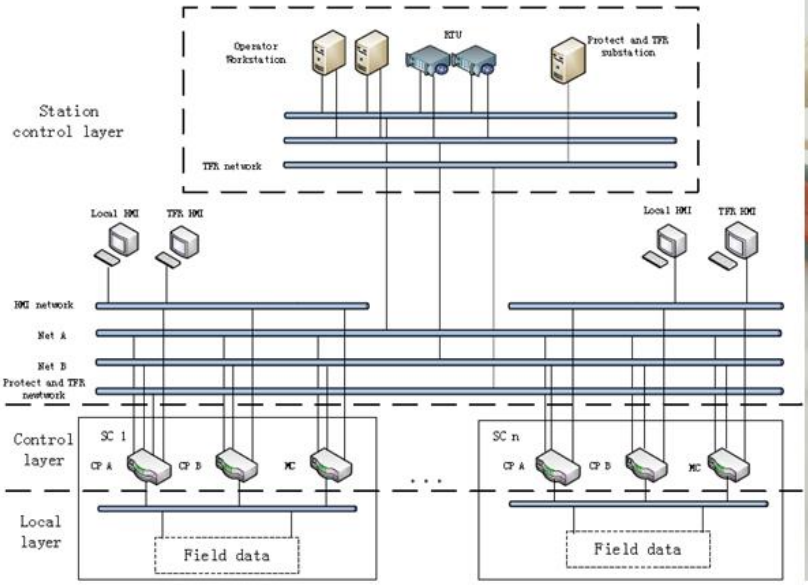

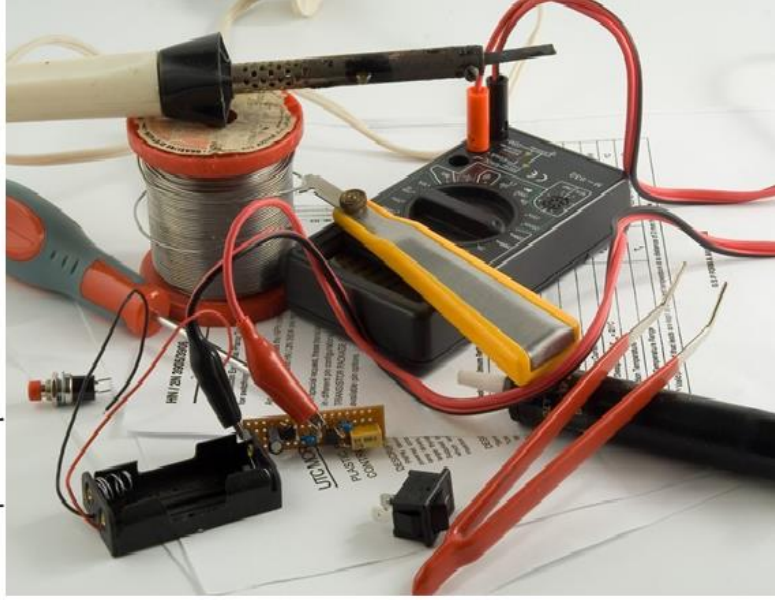

20- FSC CONTROL & PROTECTİON SYSTEM OPERATION AND MAINTENANCE MANUAL

20.1- Abbreviations

- **C&P:** Control and Protection
- **DC:** Direct Current
- **DO:** Digital Output
- **DP:** Data Process
- **FSC:** Fixed Series Compensation
- **HMI:** Human-Machine Interface
- **M&C:** Measure and Control
- **RTU:** Remote Terminal Unit
- **SC:** Series Compensation
- **TFR:** Transient Fault Recorder
- **USB:** Universal Serial Bus

20.2- General

C&P system of FSC realizes to monitor and control FSC device through monitoring and control system.

Through monitoring and control system, the checking and repairing person can monitor the running status of FSC, to view and analysis the sampling data, and to control the primary device. They play an important role in whole FSC device.

Monitoring and control system includes:

- Local HMI,
- TFR HMI,
- HMI device, etc.

Monitoring and control system uses the hierarchical, distributed network structure, composed of complete station control layer, control layer and local layer three parts and double network.

- Control layer and local layer connect via field bus directly;
- station control layer and control layer connects via industrial Ethernet;

Network topology uses star structure. Monitoring and control system of SC connects to the control devices of substation through Ethernet (fiber optic or unshielded twisted pair). Control layer is to realize the local control and interlock of SC device; local layer is to realize data collection and processing of SC device. **Tele-command is issued by the station control Ethernet.**

See Figure 2-1 **Typical network structure of monitoring and control system:**

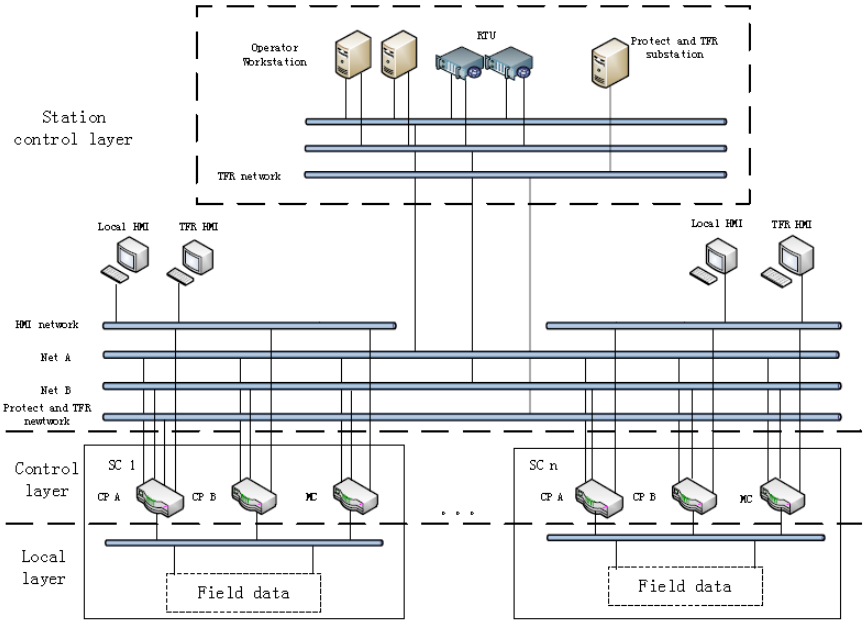

Figure 2-1: Typical network structure of monitoring and control system

The following chapters will detail every device's interface to help customers operate the devices correctly. If any doubt, please contact us to prevent misuse.

20.3- Local HMI

20.3.1- General

Local HMI provides an interface between users and FSC. Users can monitor running status of FSC, control the primary devices.

20.3.2- Runtime Environment

Local HMI running on high reliability industrial computer that supports Windows/Linux or other operating systems, supported by professional protection mechanism, which can effectively prevent malicious changes, viruses, etc. to improve the safety.

The number of external interfaces in the computer can be customized according to project requirements, with at least four Ethernet ports, four serial ports and three USB ports, using DC power supply.

20.3.3- Operational use

20.3.3.1- Software startup

It is shown as **Figure 3-1** start command. Start the terminal window, and inputs **startLM.**

After starting the monitoring and control system, operator can close or minimize the terminal window until the system starts successfully

```
cepri@cepri-virtual-machine:~/Facts/LM2015$ startLM
Init device dic
open database succeed
dev count from sql 6
yx count: 4995  yc count: 268
create yx shm  "FaYxShm1" yx count  1050
create yX shm ok
create yc shm  "FaYcShm1" yc count  67
create yc shm ok
yc start:  0 yc count:  67
create yx shm  "FaYxShm2" yx count  1050
create yX shm ok
create yc shm  "FaYcShm2" yc count  67
create yc shm ok
yc start:  268 yc count:  67
create yx shm  "FaYxShm3" yx count  1050
create yX shm ok
create yc shm  "FaYcShm3" yc count  67
```

Figure 3-1: Start Comand

20.3.3.2- **Interface Introduction**

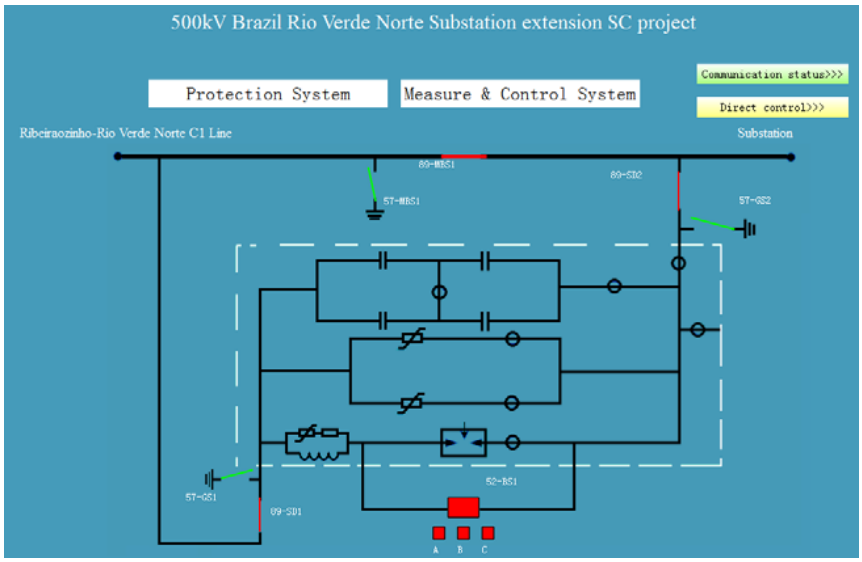

Figure 3-2: HMI main interface

The software directly into the main interface when starting, as shown in Figure 3-2 HMI main interface, composed by data display area and functional area. Data display area is mainly used to display running information, to execute remote control operation. In using multi-page hierarchy design, including the main interface, bay interface, unit interface. Different interfaces can be switched by form-feed button.

It is shown as **Figure 3-3** structure of the pages.

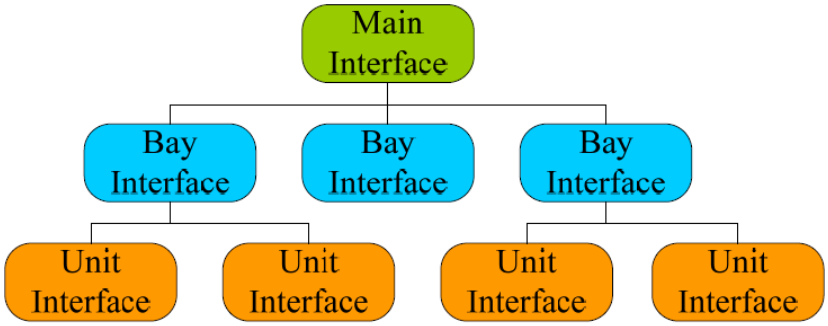

Figure 3-3: structure of the pages

1) The main interface displays the line diagram, the form-feed button on the bay interface. It can real-time browse the status of switch and breaker, the analog value and do operates to the device, etc. On the main interface, by clicking the button with bay name to enter different bay interface.

2) Bay interface shows the button of unit, by clicking on the unit button to enter the sub-unit interface, click the bay name to return main interface.

3) The unit interface shows data details, such as teleindication, telemetering, direct control commands. When the data couldn't show in one page, using form-feed button, click on the unit name back to bay interface.

Functional areas including system menu and status bar. The status bar is used to display information such as system time. System menu is used to complete the various functions of the software, as shown in **Table 1** system menu description.

Menu	Details	Function
The system of menus	Protect management	Enter into protect management interface
	Events report management	Real-time browsing
		History enquiry
	User management	User login
		User logout
		User edit, to add or delete users, to modify them
	Version information	Look up the software description
		Enter into protect management interface
	Exit	Exit system

Table 1: system menu description

20.3.3.3- Data browsing

20.3.3.3.1- Teleindication browsing

It is shown as **Figure 3-4** teleindication browse. In using form-feed button to enter the teleindication units, you can view the status of teleindication.

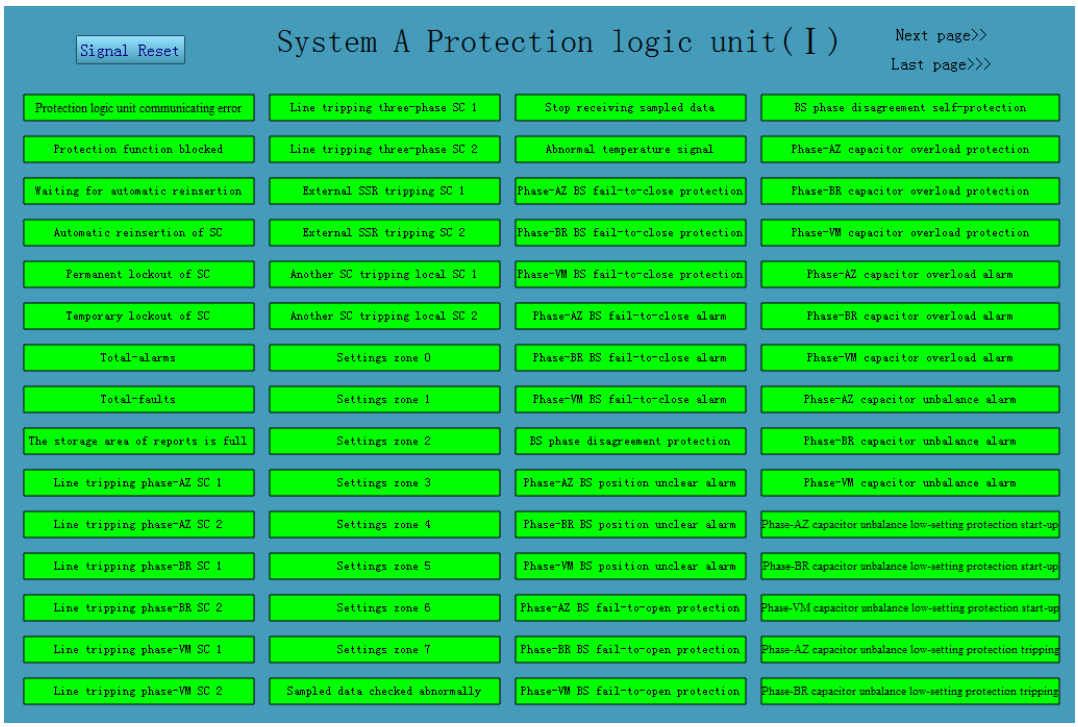

Figure 3-4: Teleindication browse

Teleindication shows green means invalid, red means effective, and flashing means state changes.

People right-click the blank page, can stop flash after selecting for the current page or for whole interface.

t is shown as **Figure 3-5** clear flashing.

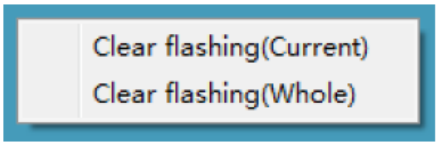

Figure 3-5: clear flashing

20.3.3.3.2- Telemetering browsing

It is shown as **Figure 3-6** telemetering browse.

In using form-feed button to enter the telemetering units, you can view the value of telemetering in real-time.

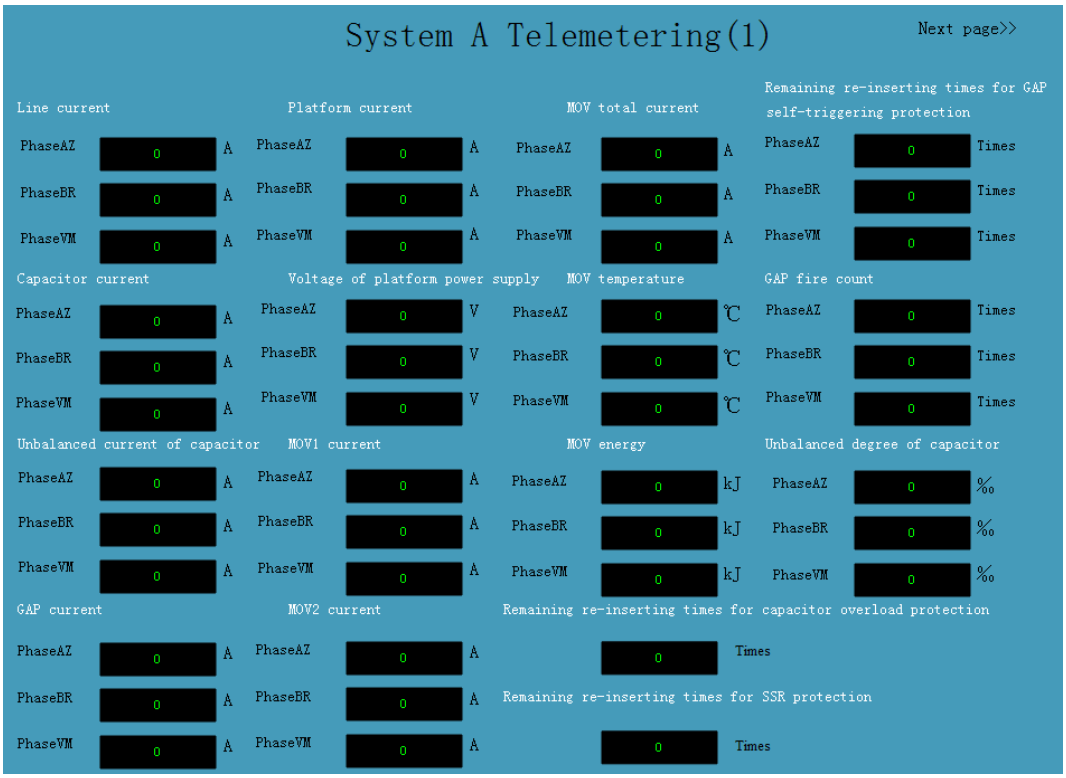

Figure 3-6: Telemetering browse

20.3.3.3.3- Status of switches browsing

Home page with the line diagram shows the different status of the switches. As shown in Table 2 switch description. Switches or breakers primitive on the interface will flash when the status changed.

Name	Color	Status	Graphic
Switch	Green	Open	
	Red	Close	
	Both/None	Location is not clear	
Breaker Name	Green	Open	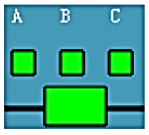
	Red	Close	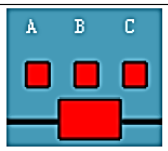
	Gray	Location is not clear	

Table 2: Switch description

20.3.3.4- Protection Management

Protection management interface through the control area on the left side to select settings management or strap management, the system and the unit, to view or modify settings value or straps on the right side.

The settings value and the status of strap can be saved as text (.txt), or printing directly.

It is shown as **Figure 3-7** protection management.

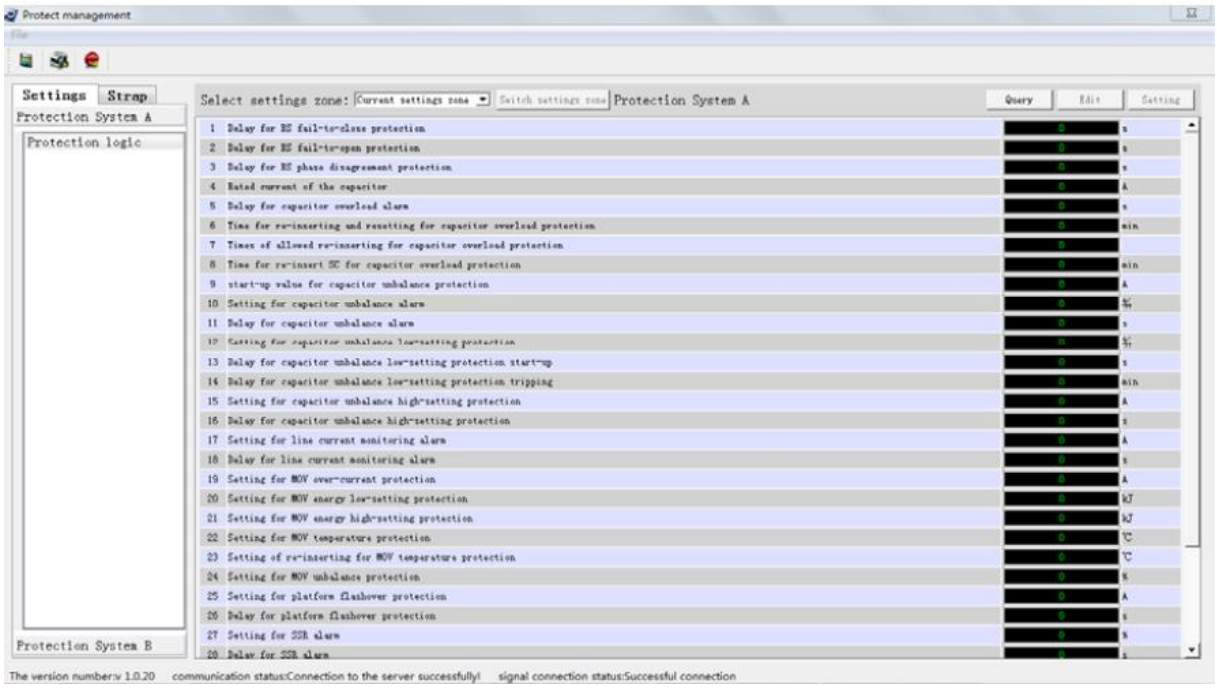

Figure 3-7: Protection management

3.3.4.1 Settings value management

Before query or modify settings, or shift settings zones, the operator should select the settings zone first, mainly operation as shown in Table 3 settings management.

Operation	Operation Content
Switching setting zone	Select settings zone → click： Switching setting zone → Select → Execute. As shown in Figure 3-8 settings zones switch operation
Query value	Select settings zone→click： Query
Modify value	Select settings zone→click： Query→click： Edit→modify value→ click： Setting

Table 3: Settings management

Note:

① Modify value must query first.

② using the Edit button to modify after the query.

③ using the Settings button after modification and receive a prompt is just successfully completed.

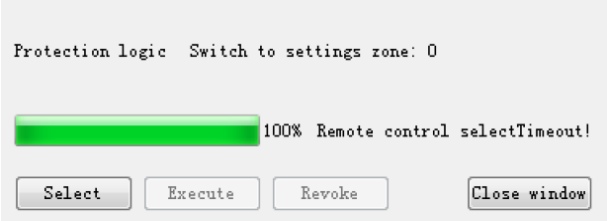

Figure 3-8: Settings zones switch operation

It has to query settings value and use the **"Edit"** button every time before modification. Settings value modified is in numerical value display window. If the new value exceeds the range, pop-up prompt window, and modify the background color to red on that value. It is shown as Figure 3-9 settings value modifies out of range prompt. If the value is within the range, the background color changes to white. After all modifications complete, click the **"Settings"**. Getting successful tips means done.

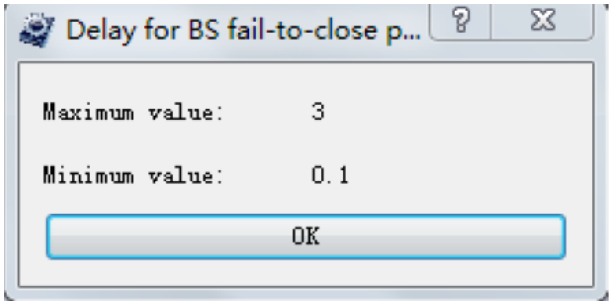

Figure 3-9: Settings value modifies out of range prompt

20.3.3.4.2 Strap management

It can query strap status or on/off it, etc. As shown in **Table 4** straps management.

Operation	Operation Content
Query strap	Click：Query
On/Off strap	Click：Query→click：Edit→modify value→click：Setting

Table 4: Straps management

It has to query strap and use the **"Edit"** button every time before modification. And then to do **on/off straps operation**. Off strap shows green, on strap shows red.

As shown in **Figure 3-10** straps operation.

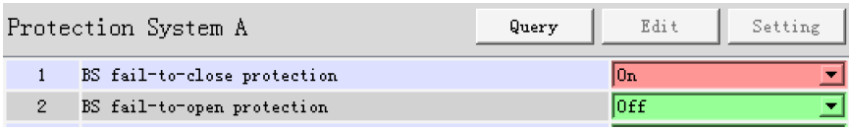

Figure 3-10: Straps operation

20.3.3.5 Events report management

20.3.3.5.1- Real-time browsing

Real-time browsing used to display system communication, the alarm information, the protection information, and the SOE information, etc. It can be displayed in three ways:

① **Maximize the window** ---- To show all of the information with different colors and types. As shown in **Figure 3-12** main interface of real-time event information.

② **Status prompt window** ----- To remind there is new information by a flashing window.

③ **Minimized windows** ----- display the latest information content and flashing. As shown in Figure 3-11 information prompt interface.

After the software startup, the window will be flashing when new information comes. Click **"Clear flash"** button to stop flash. Double-click the message display area or click on **"Details"**, the interface will maximize to ①. Click on **"Collapse",** reduced to ②.

Real-time browsing window display in status prompt way, operator can exit it through **"Menu"** button on the window. After exiting this window, real-time data cannot be displayed and the data at that time can be browsed in historical event query. Real-time browser window can be opened though system menu.

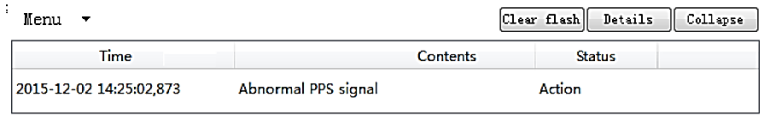

Figure 3-11: information prompt interface

The main interface is divided into two parts as shown in **Figure 3-12** main interface of real-time event information, the upper screen interface and lower screen interface:

1. the **upper** shows only **"fault"** type and **"alarm"** type information.
2. the **lower** is divided into five sub-interfaces:

- **All:** Displays all types of information
- **Fault:** Show only fault types information
- **Alarm:** Show only alarm type information
- **SOE:** Show only SOE type information
- **System:** Show only system type information

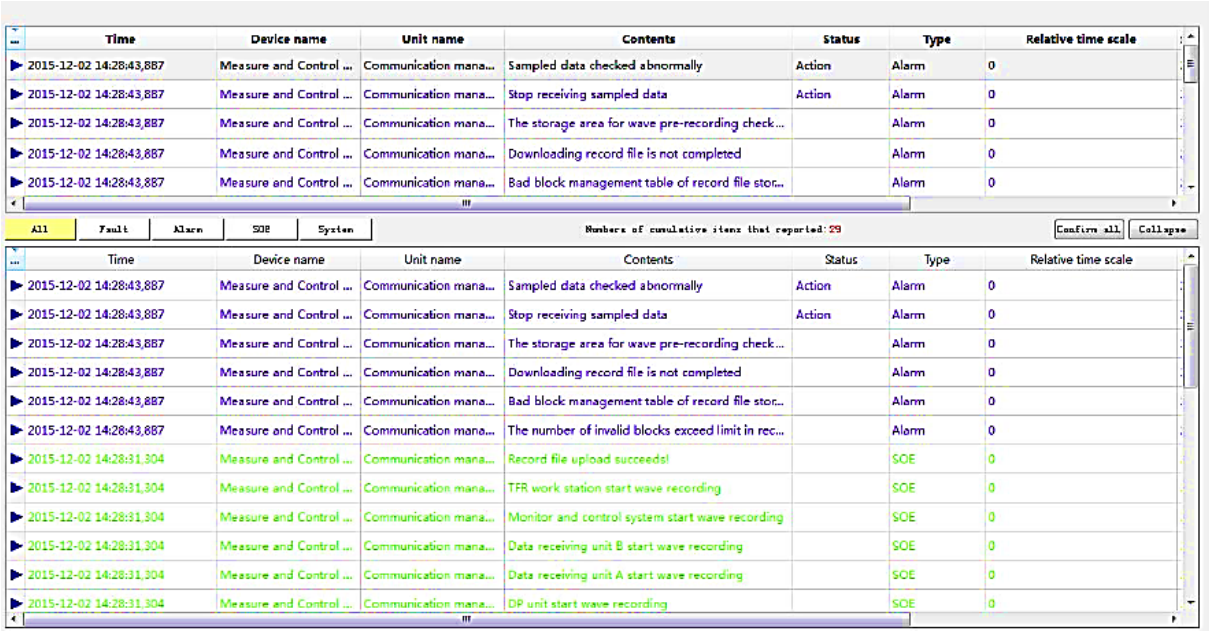

Figure 3-12: Main interface of real-time event information

In real-time browsing window, click **"Confirm all"** button, the information displayed will change the color to gray. Right-click on a blank area in the middle of window, it will pop-up the menu. As shown in **Figure 3-13** events browse interface.

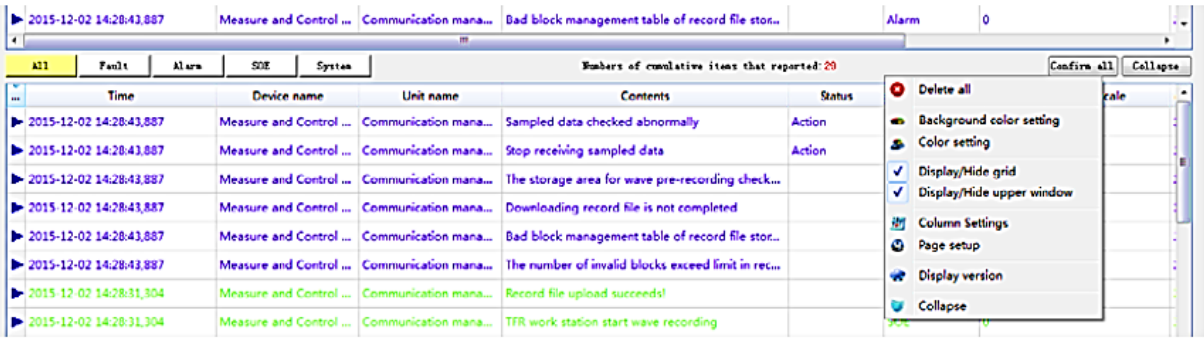

Figure 3-13: Events browse interface

- **"Delete All":** You can delete all information displayed.
- **"Background Color Settings":** User can set the background color for all information that displayed, but it doesn't work for the existing information.
- **"Color settings":** User can set different color to different types of information, but it doesn't work for the existing information.
- **"Display / Hide grid":** All grids in different interface will be hidden or displayed.
- **"Hide / Display upper window":** You can hide or display the top of the window.
- **"Column Settings":** User can select the needed column name, and then the interface display mode will be re-set and saved, and will serve as the default setting.

Among them, the time, contents, status are the default options, the device name, unit name, type, relative time scale, and the reception time scale are optional.

As shown in **Figure 3-14** column settings.

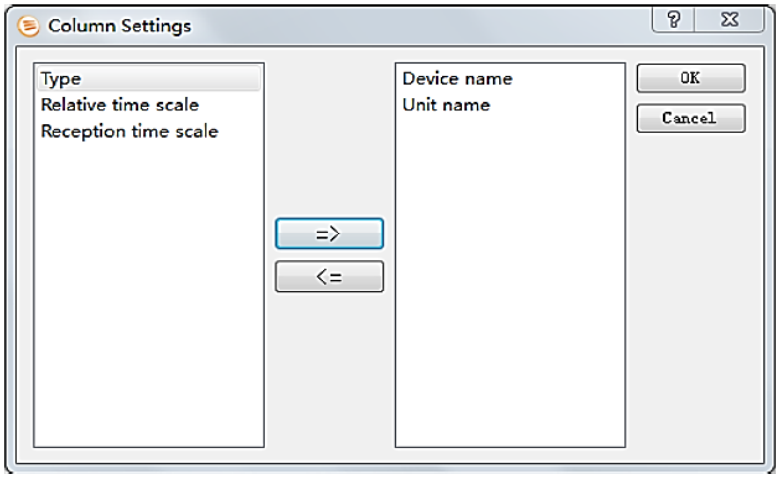

Figure 3-14: Column settings

- **"Page setup":** It is mainly to set the number of display or delete for different types of information. As shown in **Figure 3-15** interface settings.

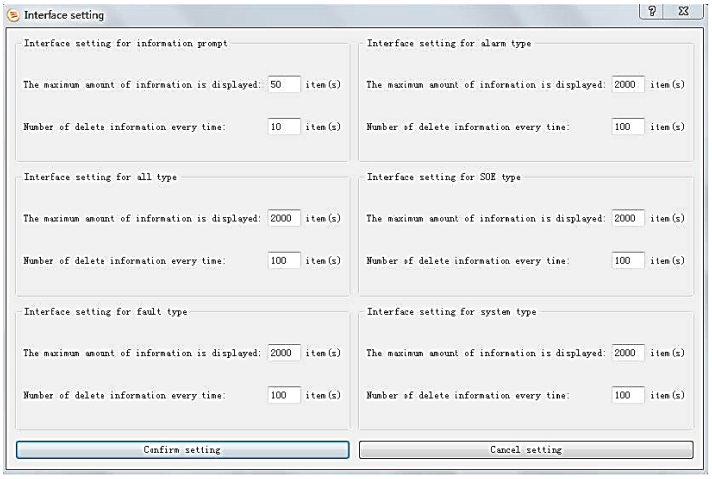

Figure 3-15: interface settings

20.3.3.5.2- Historical Events Query

Historical events query is based on user settings to query information and to Provide save and print functions. Users can query based on device, CPU, types and time interval.

As shown in **Figure 3-16** historical events query, the functional areas on upper part has buttons as follows:

- query,
- save file,
- print,
- display settings,
- previous page,
- next page,
- software version
- and exit:

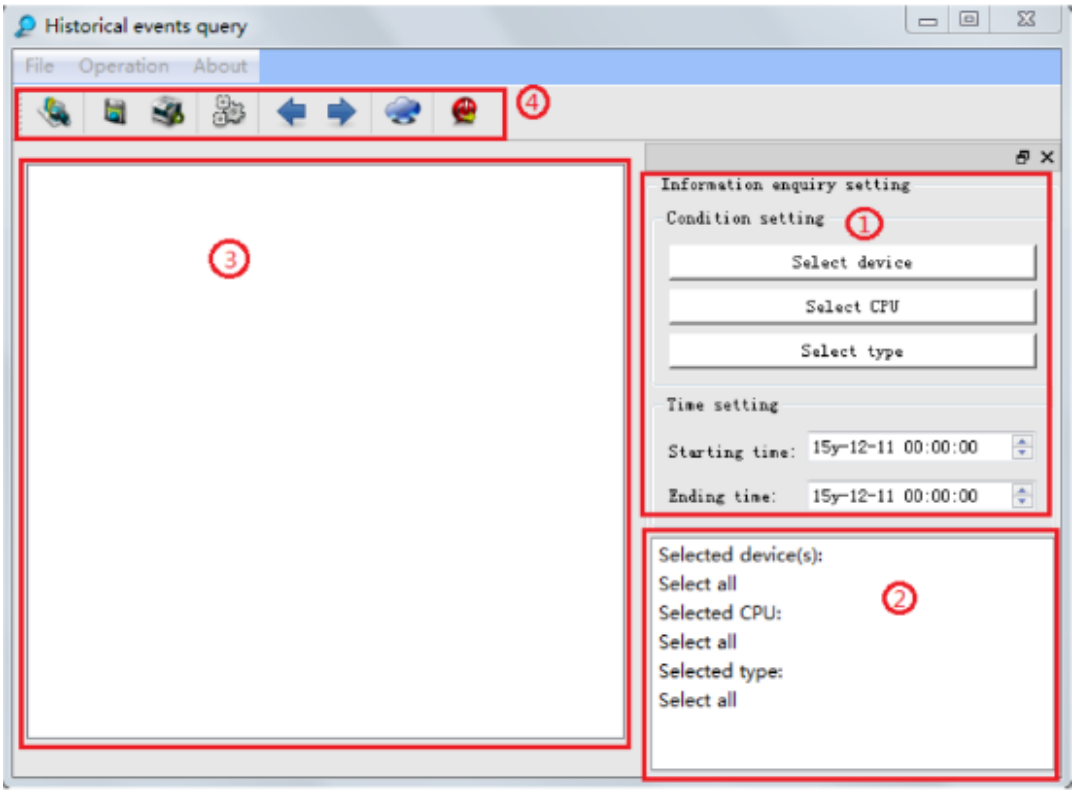

Figure 3-16: historical events query

The setting area on the right side can be selected to query by setting devices, CPU, types and time interval. The query settings you have done displays in the lower part of window.

As shown in **Figure 3-17** query condition selection. It's the same way to set CPU and type as selecting device. Time settings can be adjusted up or down by using the arrow on the right, or using the keyboard to modify it.

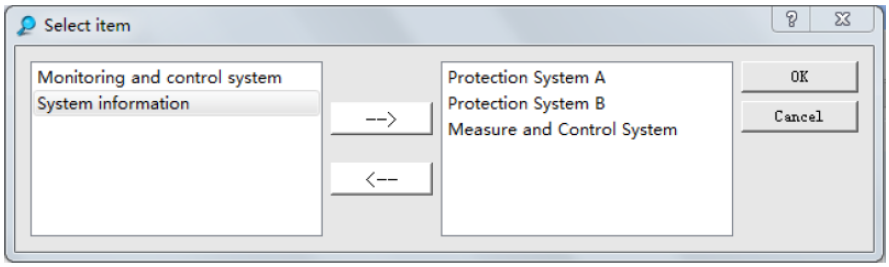

Figure 3-17: Query condition selection

Set the query conditions, and click on the **"Query"** button to start the search. The results are displayed in the result displayed area. Window status bar displays the query results and the time spent.

- Double-click an event can display the window for viewing parameter. That window displays the parameter of the selected event. The window for viewing parameter will change with the selected event change. As shown in **Figure 3-18** result of historical query.

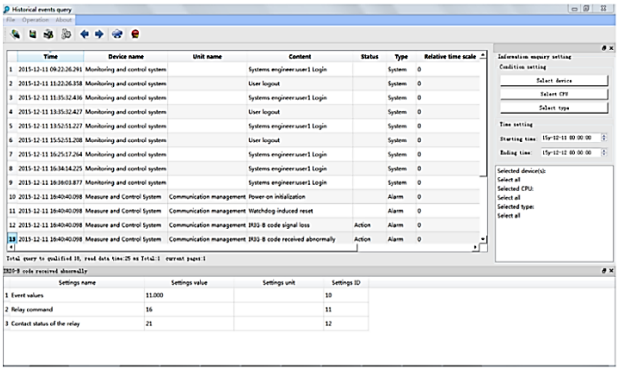

Figure 3-18: result of historical query

- When the information couldn't be displayed in one page, you can press **form-feed button** on the function area to change the page.
- By using the **"Save file"** button, user can set the save path and file name if necessary, and to save the query results as a text file **(.txt format)**.
- User can print the results by using the **"Print"** button. According to the needs, user can select the column name, the time of events or the content to print. Selection procedure is similar to **Figure 3-17** query condition selection.
- The condition settings area on the right side can be closed or moved. If the window is closed, click **"Display settings"** button on the upper ribbon can display again.

20.3.3.6- Control

Control operation separates remote control and direct control. All control commands operations require it has logged.

20.3.3.6.1- Direct control operation

Click the direct control button to enter the direct control interface, then click button to enter the needed unit. Finally, click a direct button you need and execute to finish the operation. It is shown in **Figure 3-19** direct control command.

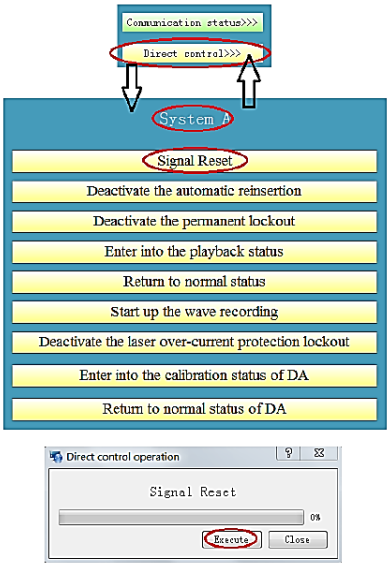

Figure 3-19: Direct control command

20.3.3.6.2 Remote control operation

Select the desired operating switch in the line diagram, and right on the primitive, then pop-up menu shown in **Figure 3-20** remote control menu. By this menu you can view the configuration of the switch, or may also enter the remote control operation window.

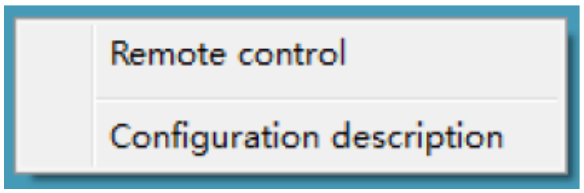

Figure 3-20: remote control menu

Configuration Description: Displays the basic information of the current switch, such as name, ID, in which the unit, CPU unit, etc. As shown in Figure 3-21 configuration description.

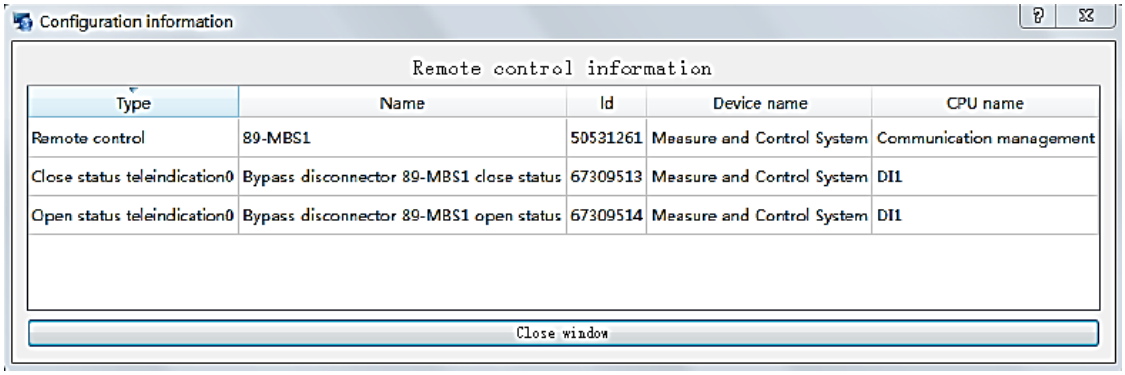

Type	Name	Id	Device name	CPU name
Remote control	89-MBS1	50531261	Measure and Control System	Communication management
Close status teleindication0	Bypass disconnector 89-MBS1 close status	67309513	Measure and Control System	DI1
Open status teleindication0	Bypass disconnector 89-MBS1 open status	67309514	Measure and Control System	DI1

Figure 3-21: configuration description

Remote control interface is as shown in **Figure 3-22** remote control operation. It needs the guardian to input password when you enter remote control window. It will judge the interlock logic when doing remote control operation. It can be executed if it meets the requirements. Remote control operation is according to the SBO with enhanced security mode. You will get the prompt to show the results for each step. After executing successful, you can close the window and to see the location.

Figure 3-22: remote control operation

In the remote control window you can view interlock logic of the switch and if the current position switch meets this interlock logic. Select logic operation, **"temporarily unlock"** and **"Display logic"** button displayed. Temporarily unlock can make you do remote control operation without the interlock logic at that time. Display logic can display the interlock logic and the current status of switch. As shown in **Figure 3-23** interlock logic.

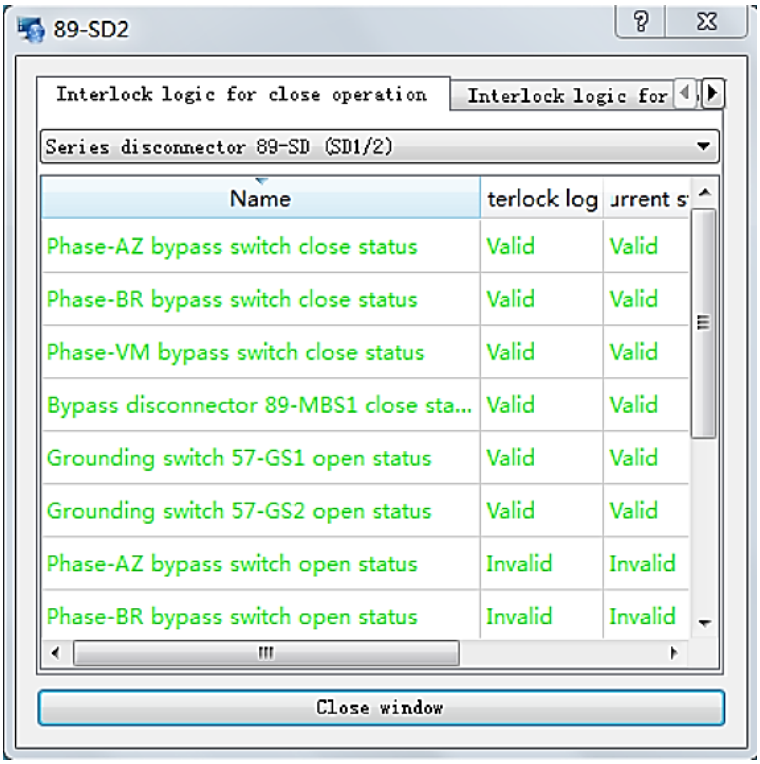

Figure 3-23: interlock logic

Note 1: All operations are required after you log in..

Note 2: Temporarily unlock means remove the interlock logic for the local monitor, and valid for the current operation.

Note 3: The remote control revoke cannot undo remote control execute operation which has been completed.

20.3.3.7- Others

20.3.3.7.1- User Management

Different level user has different operating authority, it is shown in **Table 5** users level list.

Operator	Operational matters	Not operational matters
Operator	Remote control operation	Modify settings, user edit
		user edit
Protection engineer	Query and modify settings	Remote control operation, user edit
		user edit
System engineer	All	-------
	user edit	

Table 5: users level list

- **User login:** Select login user levels, user name, enter a password to login. Login time is the length between users logged in and the automatic logout. User can log in whatever the status is login or not, as long as the password is correct. The new one is login and the old one is logout automatically.

- **User logout:** It's to log off current user. After logout, system is not logged, some operations cannot be executed.

- **User edit:** User edit requires system engineer level at least. As shown in Figure 3-24 user edit. Operation item can be selected the operation that needed, including edit user, add user and delete user.

  1. **"Edit user"** is to modify an existing user level or password.
  2. **"Add user"** is to increase a user and set a name, a password, and the level.
  3. **"Delete user"** is to remove an existing user.

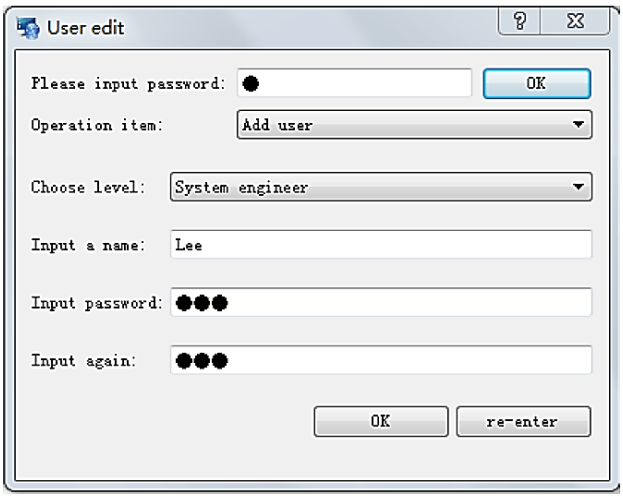

Figure 3-24: user edit

20.3.3.7.2- Version information of board query

It is used to query the version information of board. Select the device and the CPU to be queried, **"Versions Query"** button turns red, you can click the query. As shown in **Figure 3-25** version query.

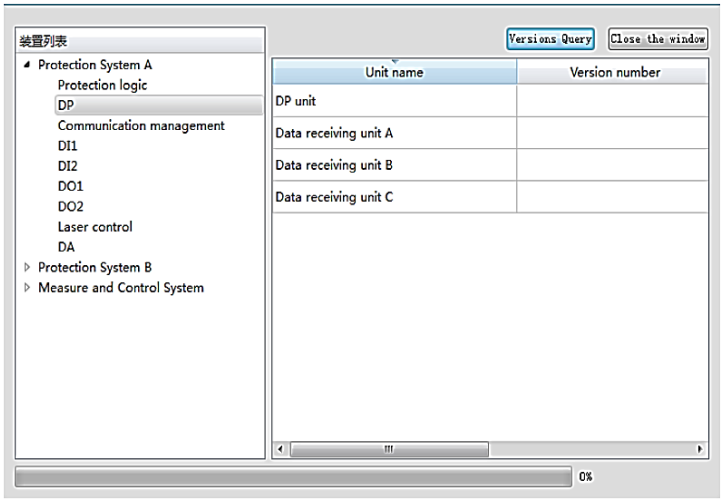

Figure 3-25: version query

20.3.3.7.3- Exit

Click on the **"Exit"** to exit the monitoring software. No user logged in is forbid to exit, and logged-in user, will be asked quit or not. If confirm to exit select OK, or select Cancel.

20.4- TFR HMI

20.4.1- General

During faults and some special circumstances, TFR system is used to record the value of electrical signal, transmit, save, display related data, and to query, analysis the fault and the system status.

20.4.2- TFR

The interface of TFR HMI software is shown as **Figure 4-1** TFR HMI. System can start data record automatically. Also users can click button **"Start"** to start record data.

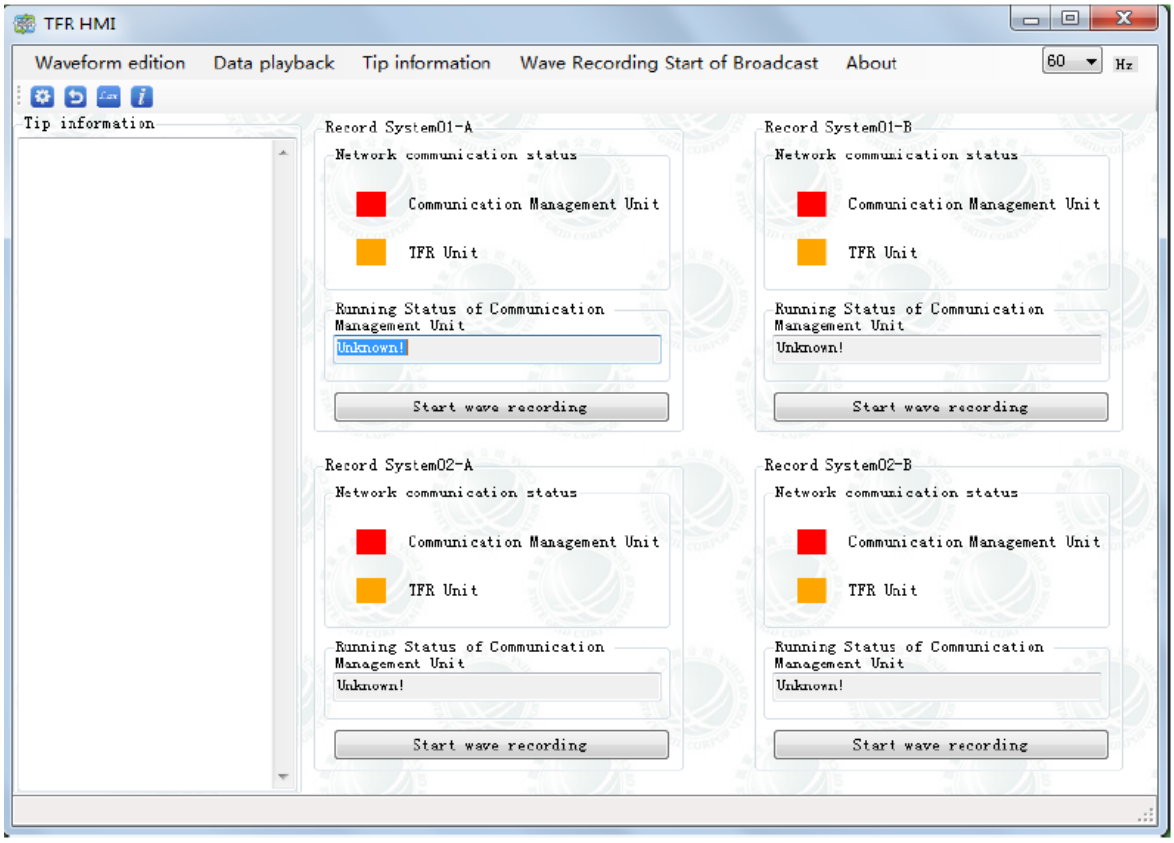

Figure 4-1: TFR HMI Interface

20.4.3- Historical data playback

Click button **"Data Playback"** or the icon from tool bar. The window will pop-up, showing as **Figure 4-2** Historical data playback. Click button **"Browser"** and select one data file to playback. Then select the playback object. Click buttons **"Download"**, **"Request for playback"** and **"Start playback"** sequentially to complete the whole process.

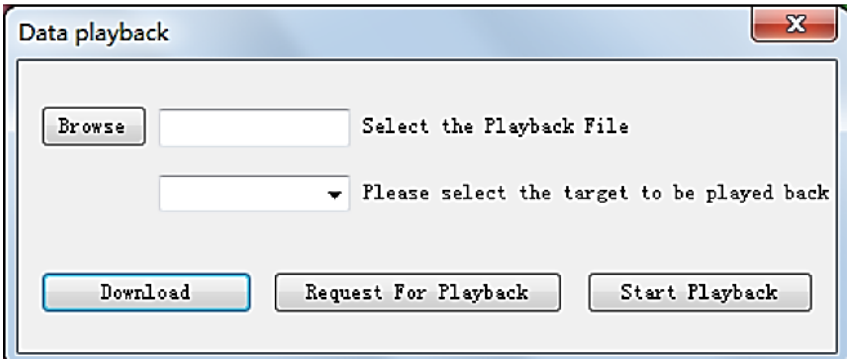

Figure 4-2: Historical data playback

20.4.4- Custom waveform playback

20.4.4.1- Operation steps

Step1: Click button **"Waveform Edition"** or the icon. The window **"Waveform Edition"** will pop-up, showing as **Figure 4-3** Waveform edition.

Step2: Click button **"Start Editing"**. The textboxes become editable.

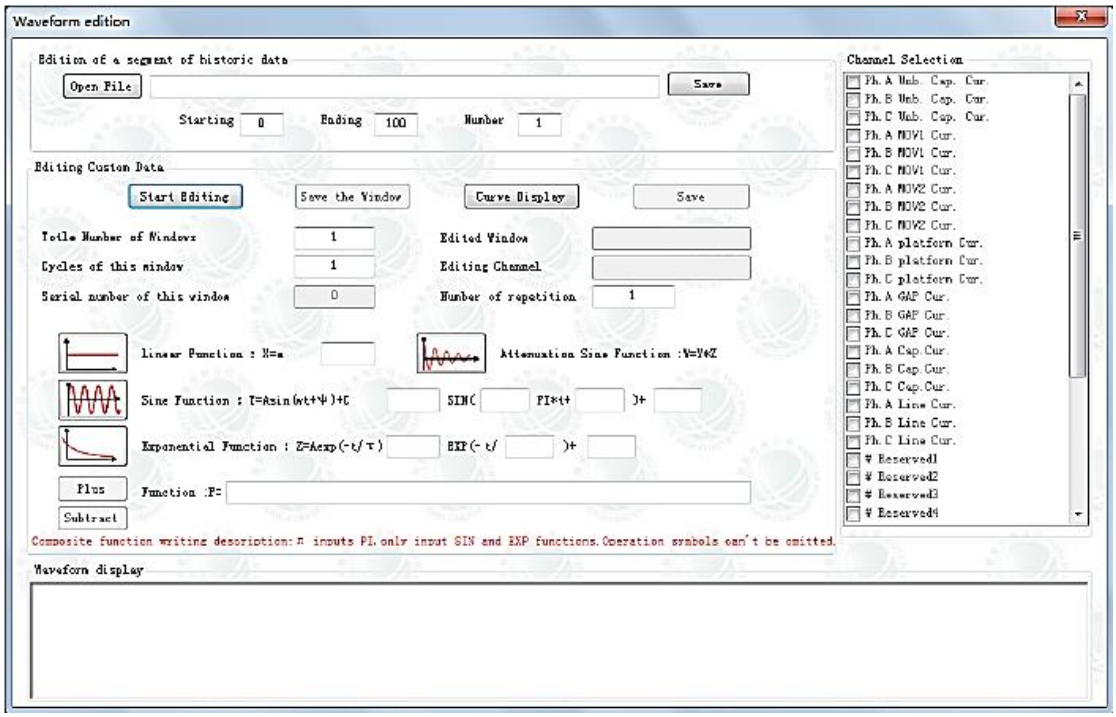

Figure 4-3: Waveform edition

Step3: The textbox "Total Number of Windows" is the number of segments of a waveform. The textbox **"Serial number of this window"** is the index of waveform segment to be edited. The textbox "Cycles of this window" is this length of this segment, counting in cycles. The textbox "**Number of repetition"** is the times that **DP unit** should playback this window waveform.

Users should choose the object channel from the group box **"Channel Selection"**. And then fill textboxes mentioned above. The waveform is designed as textbox **"Composite function"** showing.

You can use the curve provided in the window or input the function directly in the textbox **"Composite function"**. When you use the curve in the window, you click this curve. A window will pop-up, in which edit the parameters. Then add this curve in textbox **"Composite function"** using button **"Add"** or button **"Subtract"**. The final function will be displayed in the textbox **"Composite function"**. When this window waveform edition finishes, click button **"Save the Window"**, or the waveform will lose.

If you want to modify one window waveform, input the window index in textbox **"Serial number of this window"**, reedit this waveform's function and save.

Step4: Repeat step3 until all windows waveform edited. Click button "**Curve display"** to view the overall continuous curve.

Step5: When all waveforms edition finish, click button **"Save the Window"** and then click button **"Save"** to save in a file. Close window **"Waveform Edition"** and return to main form. Click button **"Data Playback".** A window **"Historical Data Playback"** showing as **Figure 4-2** Historical data playback. Choose the edited waveform file you just saved and the object channel. Click button **"Download"**, **"Request for playback"** and **"Start playback"** sequentially to complete whole process.

20.4.4.2- Tips

1. If only one phase waveform has been edited, the waveform of this channel's other two phases will shift 120 degree by default.
2. Unedited channels' waveform will be zero.
3. All channels' cycle number will be the same in the same window, the same as logical channel.
4. If you want to edit one phase waveform while keep the other two phase zero. Input zero in textbox **"Composite function"** after select the other two phase from group box **"Channel Selection"**.

See **Figure 4-4** Composite function's setting:

Figure 4-4: Composite function's setting

20.4.4.3- Curve Edition Instruction

1. **Liner Function**: **(y1 = a);** means direct current electrical value.
2. **Sine Function**: **(y2 ＝ Asin (+t + ψ) + C);** means alternative current electrical value.
3. **ω is Angular Velocity, ω = 2π * f.A** is the amplitude of AC component. **ψ** is the original phase angle, **C** is DC offset.
4. **Exponential Function**: **(y3 = Aexp (- t / τ));** means the decaying DC component. **A** is amplitude. **τ** is attenuation coefficient.
5. **Attenuation Sine Function**: **(y ＝ y1 ＋ y2 * y3);** means the decaying AC component. **τ** is attenuation coefficient.

20.4.5- TFR display software

The main effects of the software is to display fault recording data and to analysis. It supports the standard **COMTRADE format file**, can cross-platform running, with accurate data display, fast, flexible operation etc.

20.4.5.1- The Main Interface

TFR display software is divided into the following areas:

- Ribbon, to lists the commonly used function buttons for use easier;
- Analog name display area, to display the analog channel name;
- Logic name display area, to display the logic channel name;
- Analog waveform display area, to shows the opened analog waveform;
- Logic waveform display area, to shows the opened logic waveform;
- Recording information display area, to shows the current waveform frequency, sampling points, Timeline and so on.

See **Figure 4-5** The divided region of main interface:

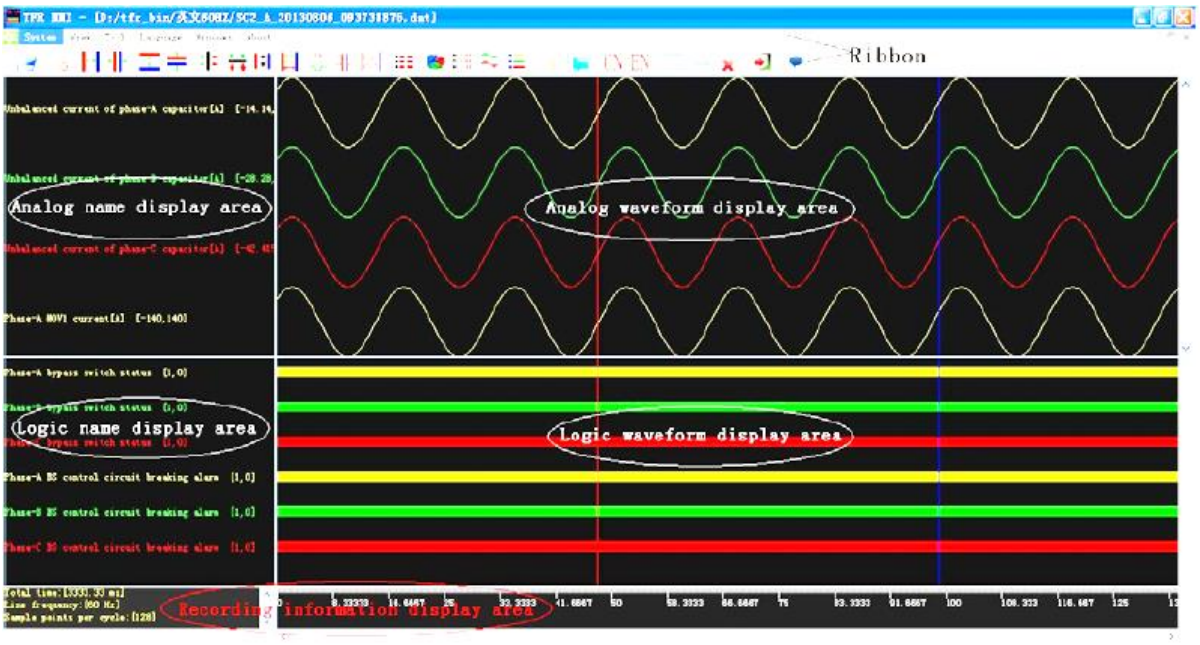

Figure 4-5: The divided region of main interface

20.4.5.2- The Waveform displays

20.4.5.2.1. The Waveform file's loading and switch:

1- Loading waveform file:

- **Open:** click **"System - Open"** button or icon button to open file, the file suffix is **"dat".**
- **Exit:** click **"System - Exit"** button or icon button, the software will exit, no matter how many waveform files were opened, all of them will be closed and the software exit.

2- The Waveforms switch

Click **"System - Open files"**, shows here are the entire name of waveforms has been opened. It's the current waveform with a painting **"√"** in front. It can switch to any open waveforms here.

See **Figure 4-6** File List:

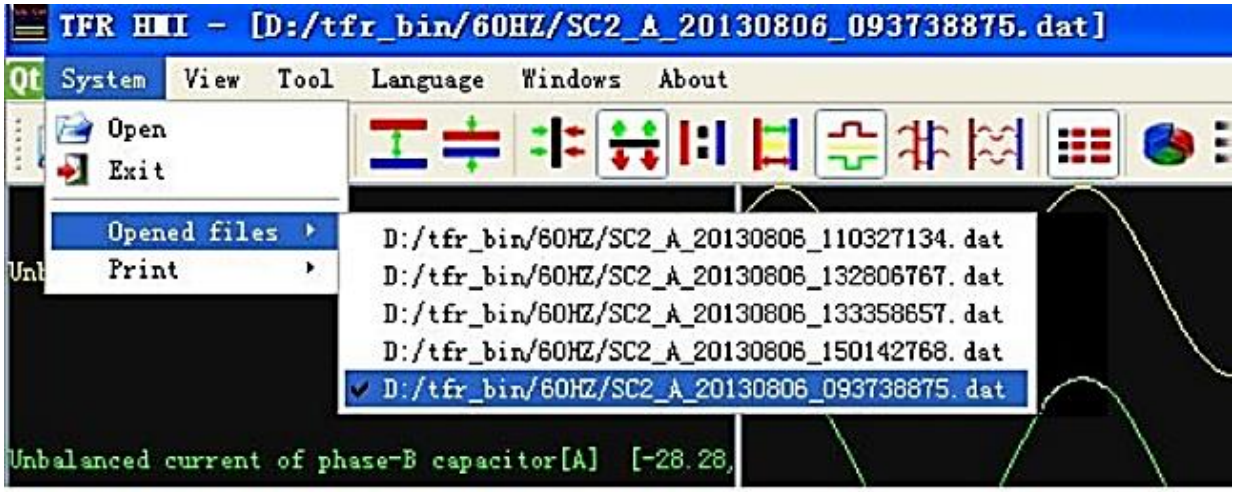

Figurel 4-6: File List

20.4.5.2.2- **The showing color switch**

1- **Background color setting:** Click **"View - Background color setting"** or icon button to set the background color of main interface.

2- **Set channel color**: In the logic channel or analog channel name display area right-click to select a channel, click **"Channel color setting"**, you can set the color according to needs.

3- **Modify configuration:** Click **"View - Modify configuration"** button or icon to set channel configuration, see Figure 4-7:

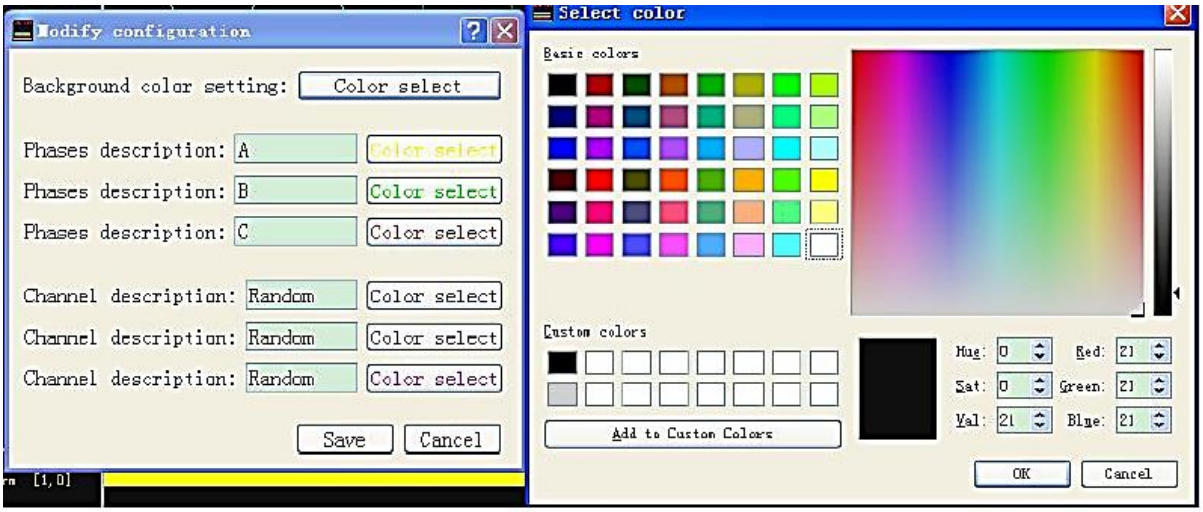

Figure 4-7: channel configuration settings

It allows the settings for background color of waveform displayed screen and the channel color. Click **"Color Select"** button to pop up the right side of color selection window, the user can choose any color according to need, and click **"OK"** to set the color of channel.

Please note that when you change the channel description: The phase should consistent with **CFG file**. After setting, click **"Save"** button to save, restart to take effect.

20.4.5.2.3. **Display and hide of channel**

1- **Show or hide analog channels**: Click **"View - Show/Hide analog channels"** or icon button in main interface to show analog channel window, see **Figure 4-8**. Or in analog channel name area of main interface, select a channel to click right, click **"hidden channel"** can hide the selected channel.

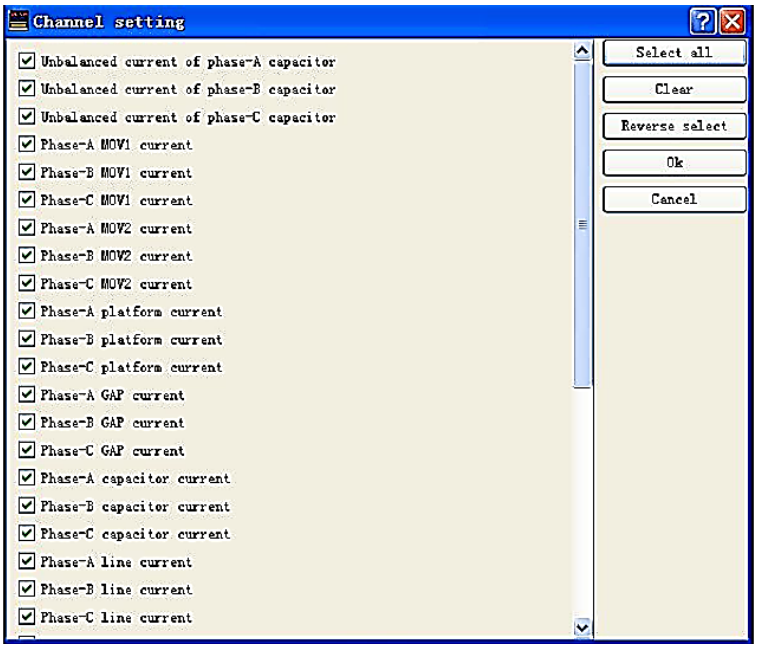

Figure 4-8: Analog channel selection dialog

2- **Show or hide logic channel**: Click **"View - Show/Hide logic channel"** or the icon button in main interface to show logic channel window, see **Figure 4-9**. Or in logic channel name area of main interface, select a channel to click right, click **"hidden channel"** button can hide the selected channel.

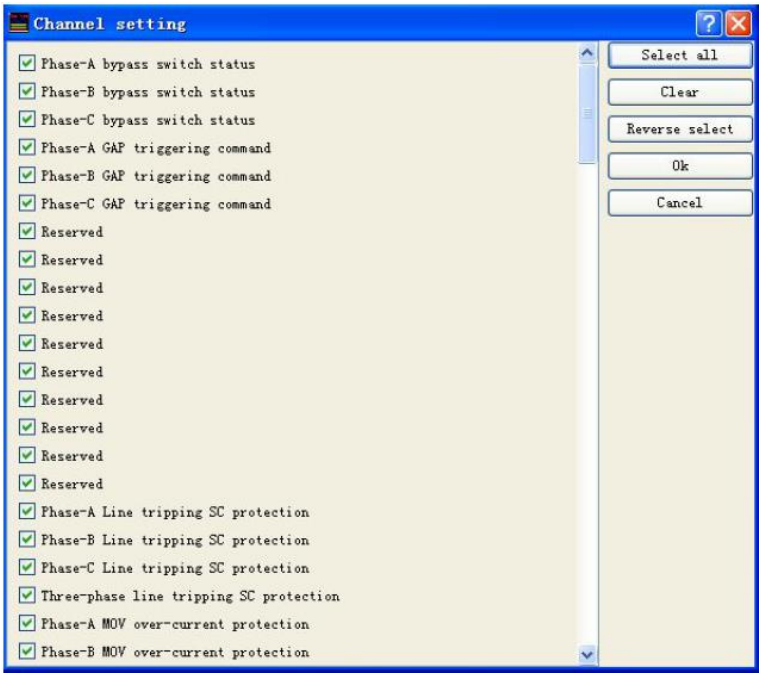

Figure 4-9: Logic channel selection dialog

20.4.5.2.4- Others

1- **Show or hide trigger line**: Click "View - Show/Hide trigger line" or icon to show or hide the wave recording trigger line in main interface.

2- **Show or hide wave info:** Click **"View - Show/Hide information recorded wave"** or the icon button to Show or hide the information window of wave recording in main interface.

3- Modify limit**:** Click **"View - Modify limit"** or the icon button will pop up a window about modify channel limits, the operator can modify according to their needs, see **Figure 4-10**. In analog channel name display area right-click to select a channel, click **"limits setting"** to modify the selected channel limit.

Note: This will be disabled in Horz Compress mode.

Name	Type	Value	Factor
Unbalanced current of phase-A capacitor	Max value	163.835	0.005
	Min Value	-163.835	
Unbalanced current of phase-B capacitor	Max value	163.835	0.005
	Min Value	-163.835	
Unbalanced current of phase-C capacitor	Max value	163.835	0.005
	Min Value	-163.835	
Phase-A MOV1 current	Max value	65534	2
	Min Value	-65534	
Phase-B MOV1 current	Max value	65534	2
	Min Value	-65534	
Phase-C MOV1 current	Max value	65534	2
	Min Value	-65534	
Phase-A MOV2 current	Max value	65534	2
	Min Value	-65534	

Figure 4-10: The window for modify channel limit

4- Show or hide ruler**:** Click **"View - Show/Hide ruler"** or the icon button in waveform display screen will show or hide the red, blue ruler. On waveform display area, **left-click** locating the red ruler position and **right-click** locating the blue ruler position.

5- **Hide Logic Channel that not shift**: Click **"View - Automatic filling Horz zoom"** or the icon button, the area between the red and blue scales will automatically fill the entire screen.

20.4.5.3- The waveform zoom

20.4.5.3.1- The horizontal zoom

1- Horizontal fixed proportion zoom: Click **"View - Time line zoom in"** or the icon button, so the waveform display in main interface will enlarge according to the timeline. Click **"View - Time line zoom**

out" or the icon button, so the waveform display in main interface will reduce according to the timeline.

2- Horizontal display the whole wave: Click **"View - Horz Compress"** or the icon button, the entire waveform will be compressed displayed in waveform drawing area.

3- The transverse area selected enlarge: Click **"View - channel Vert Extend"** or the icon button, click left mouse button and drag, the selected area will enlarge and centered.

4- Transverse sections expand: Click **"View - Custom Horz zoom"** or the icon button, click left mouse button and drag, the selected area will cover the entire screen. Click "**View - Automatic filling Horz zoom"** or the icon button, the area between the red and blue scales will automatically fill the entire screen.

Note: If the mouse is not moved or the selected area is too small, program will not deal with.

5- Transverse scaling factor reduction: Click **"View –Horz zoom reset"** button or the icon, the waveform will be displayed in original setting.

20.4.5.3.2- Vertical zoom

1- The vertical fixed proportion zoom of analog channel: Click **"View - Amplitude zoom in"** or the icon button, the waveform displayed of analog channels in main interface will enlarge according to the amplitude. Click **"View - Amplitude zoom out"** or the icon button, the waveform displayed of analog channels in main interface will reduce according to the amplitude.

2- The channel Vertical expand of analog channel: Click **"View - channel Vert Extend"** or the icon button to longitudinal expand the waveform channel automatically in appropriate ratio based on actual sample value range.

20.4.5.4- The Waveform print

It includes print snap and print wave, click **"Print snap"** of software can print graphic on screen; click **"Print wave",** can print according to user needs. Print settings, see **Figure 4-11**:

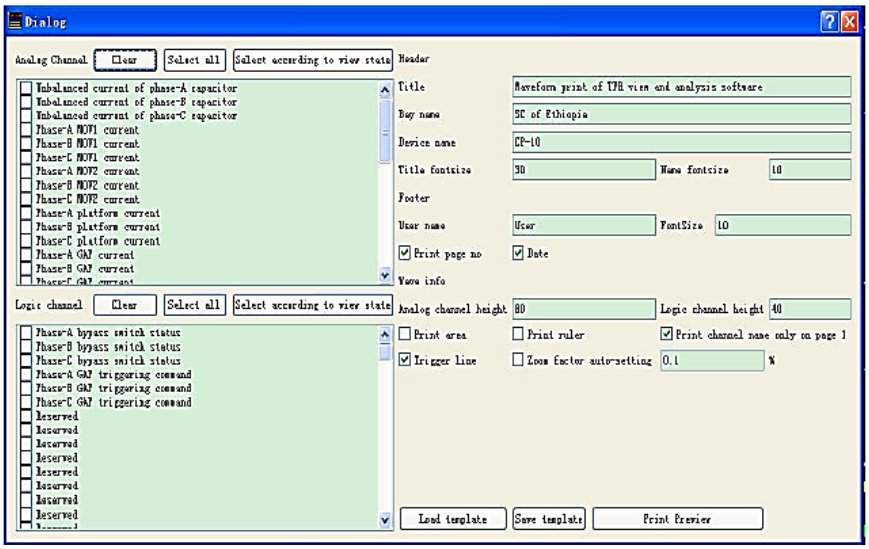

Figure 4-11: Print waveform channel selection

Select channels in left. Click **"Select according to view state"** button, the software automatically selects all channels that the window displayed.

The right side is self-configuration area. Select **"Print area"**, it will print the area between red and blue.

Choose "**Print channel name only on page 1"**, all selected channel only print the name on the first page, all pages are printed channel's name if doesn't.

Select **"Zoom factor auto-setting"**, the timeline scale of printed waveform is synchronized with the software shows'.

Click **"Save template"** button to save the editing template.

Click **"Load template"** button to reload the saved configuration file, without re-configuration. Print preview, see **Figure 4-12**:

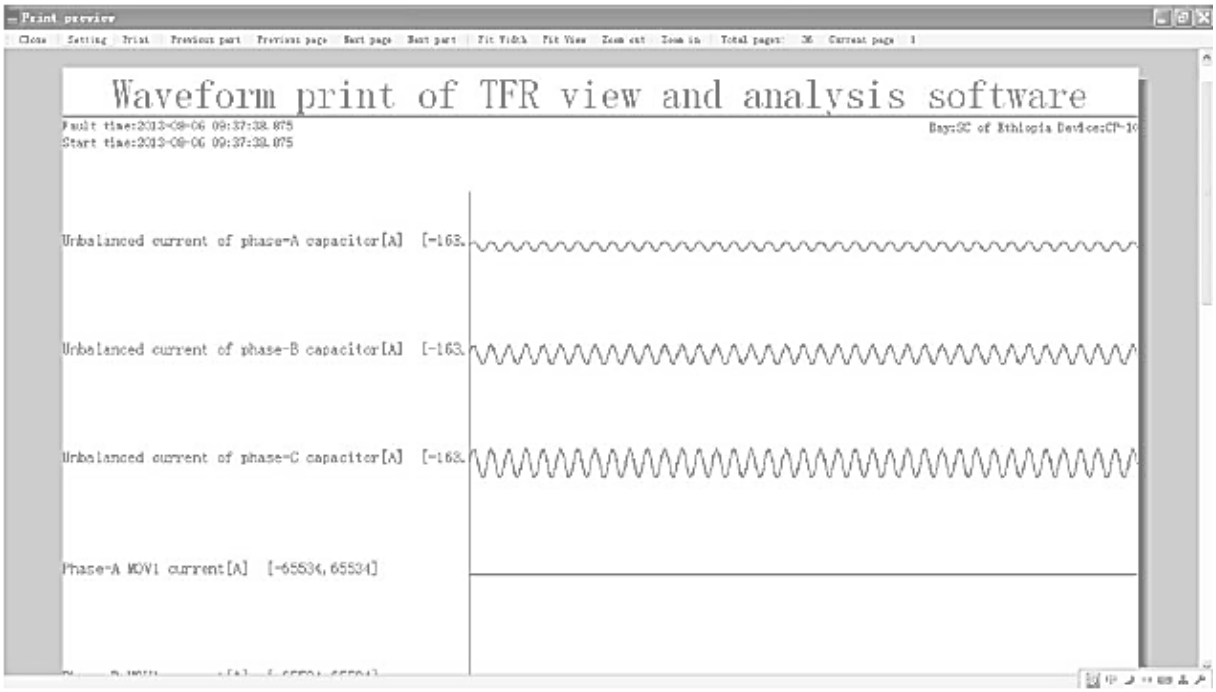

Figure 4-12: Printing waveform preview

- Click button **"Configuration"** to re-print settings;
- Click button "**Print"** button to print;
- Click button **"Previous part"** jump to previous part;
- Click button **"Next part"** jump to next part;
- Click button "**Previous"** jump to previous page;
- Click button **"Next"** jump to next page;
- Click button **"Fit Width"**, the graphic is automatically adjusted to optimum width to display;
- Click button **"for height"**, the graphic will be displayed on page intact**.**

20.4.5.5- Analysis tools

20.4.5.5.1- Screenshots

1- Click **"Tools - Screenshots tools – Capture screen"** can capture current graphical interface.

2- Click **"Tools - Screenshots tools - Capture free"** can be free to capture any part of current graphics. The graphics will with the basic information of captured channel.

3- Click **"Tools - Screenshots tools - Capture ruler"** can capture the analog channel and the logic channel graphic between red ruler and blue ruler. The graphics will with basic information of captured channel.

20.4.5.5.2- Showvalue

Click **"Tools - ShowValue "** will pop-up **"ShowValue"** window, see **Figure 4-13:**

Figure 4-13: The window shows ruler

Based on the location of red and blue ruler to display analog channels instant message: The instantaneous value and effective value of two rulers, the max and the min value of area between the two rules, and the value that the fault to be record (Fault_value). All channels can be displayed valid value and instantaneous value. In numerical display table right-click could display a plurality of project names, user can select according to the need.

20.4.5.6- Language

1- Multi-language switching: Click **"Language Settings - Chinese"** or the icon button, the waveform interface and plug-in window will display in Chinese. Click **"Language settings - in English"** or the icon button the waveform interface and plug-in window will display in English.

See **Figure 4-14:**

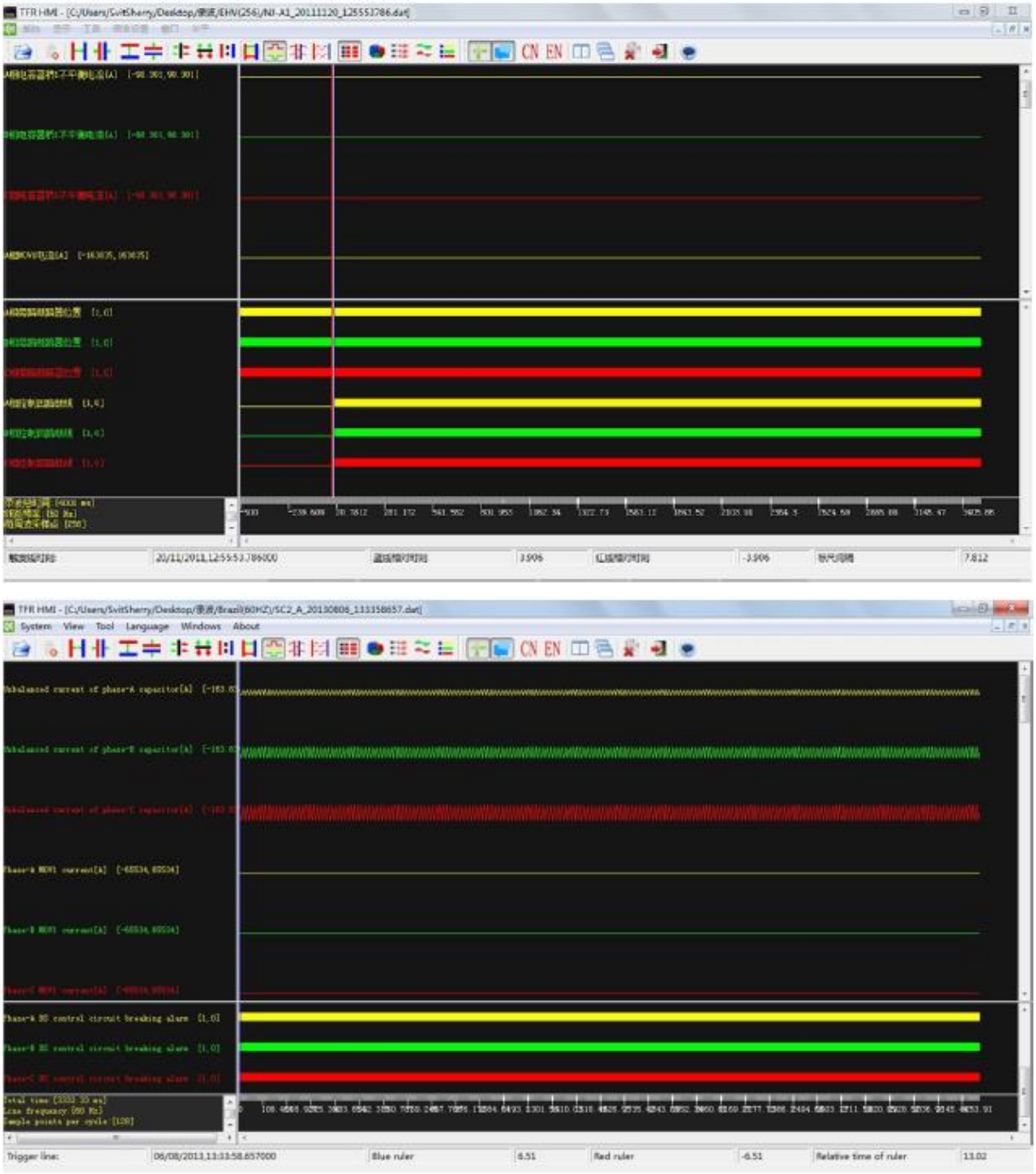

Figure 4-14: Chinese and English interface Comparison Chart

20.4.5.7- Windows

1- Close: Click **"window - Close"** button or icon will close current waveform window.

2- Close all: Click **"Window - Close all"** button or icon will close all opened windows.

3- Cascade: Click **"Window - Cascade"** or icon button, to display opened waveform cascading in main interface, see **Figure 4-15:**

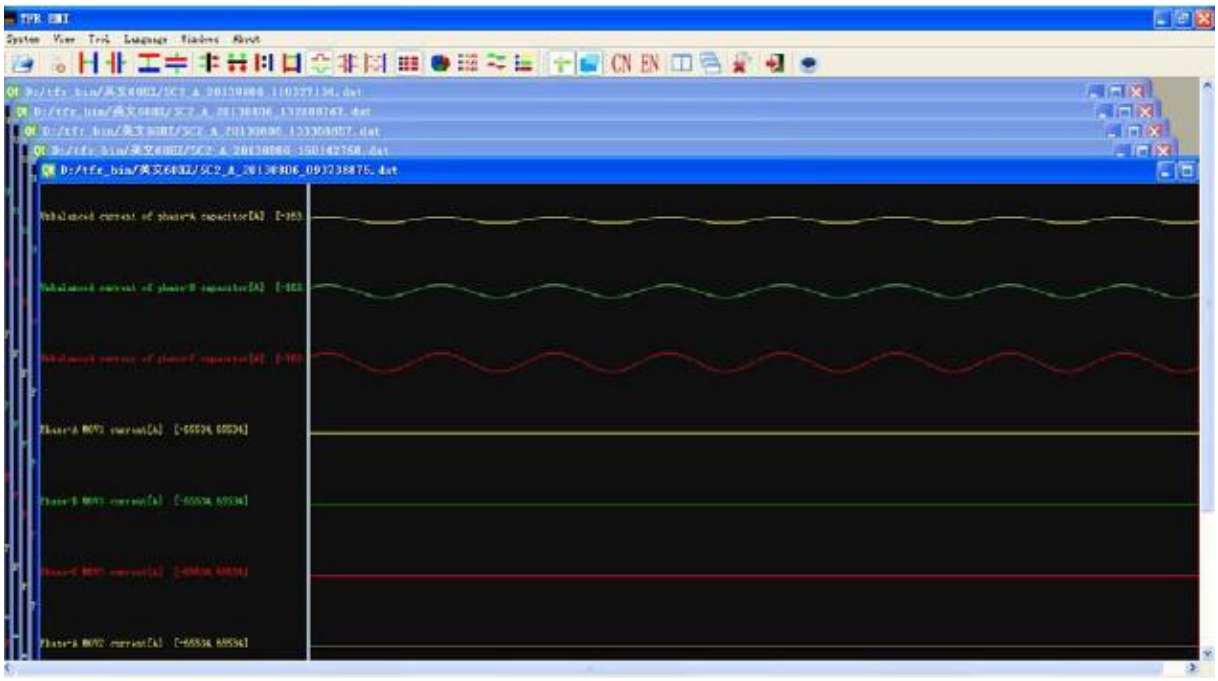

Figure 4-15: Waveform screen display in "cascade"

4- Tile: Click "**Window - Tile"** button or icon , to display the opened waveform tiled in main interface, see **Figure 4-16:**

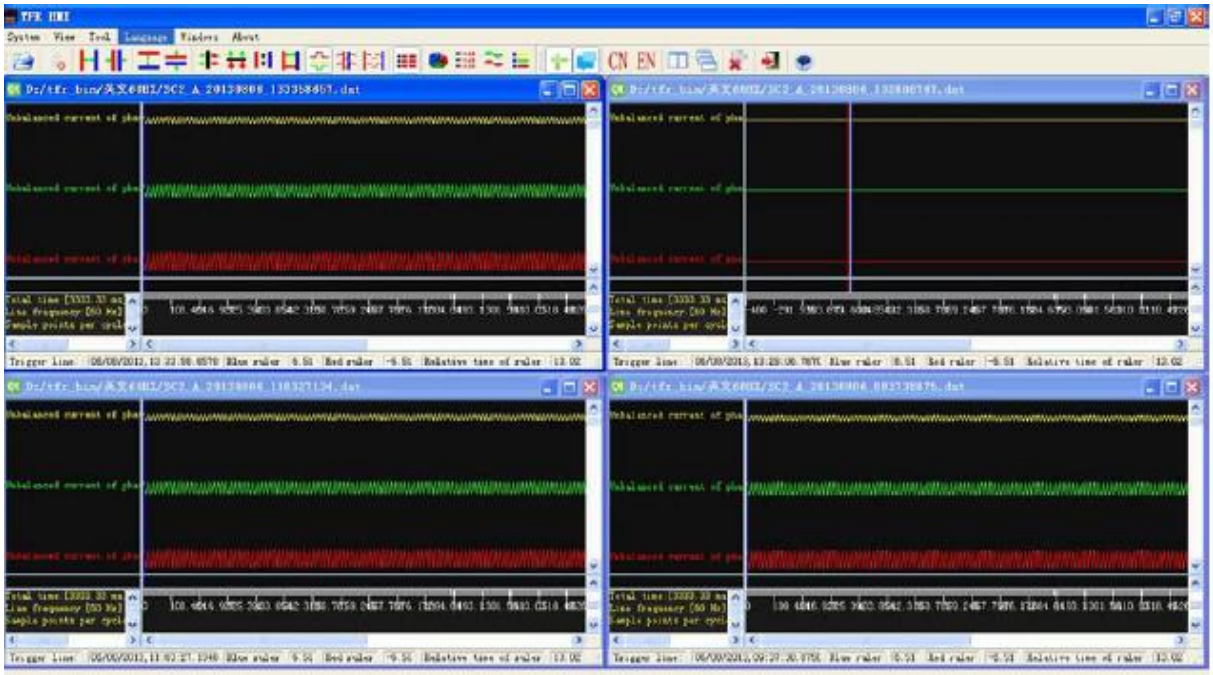

Figure 4-16: Waveform screen display in "tile"

20.4.5.8- About

1- **About**: Click **"About - displays the version"** button or icon will pop up the window about the software and plug-in version, see **Figure 4-17:**

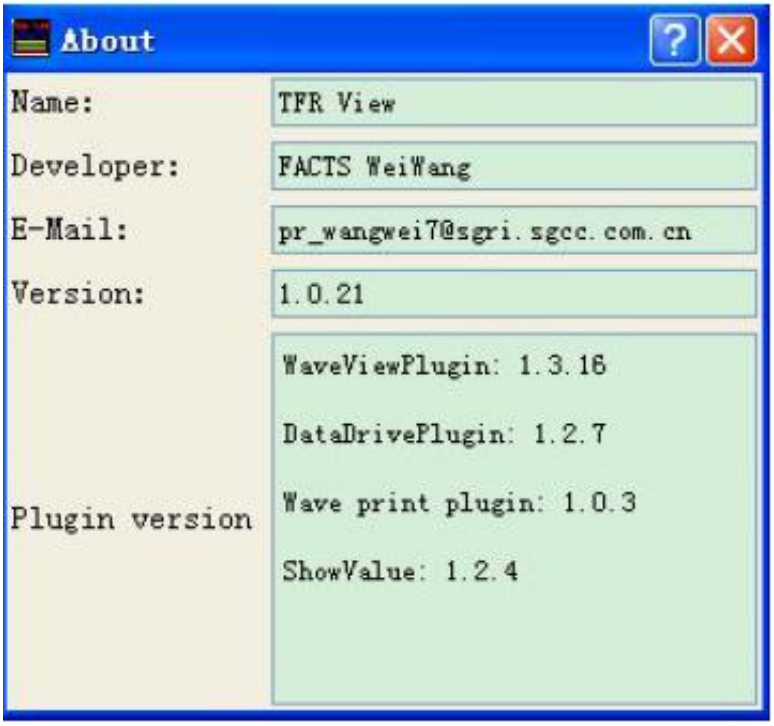

Figure 4-17: Version Displays

20.5- HMI Device

20.5.1- General

The device screen displays sampling data, device status, single line diagram, send telecommand, acquire and set parameters. Users can complete all operation through keyboard.

20.5.2- Introduction

20.5.2.1- Keyboard

All keyboard include: navigation keys **(<↑>, <↓>, <←>, <→>**) , <**OK**>, number keys（<**0>, <1> …… <9>, <.>, <- >**）, <**Menu**>, <**Tab**>, <**F12**>, <**R**>, <**Del**>

See Figure 5-1:

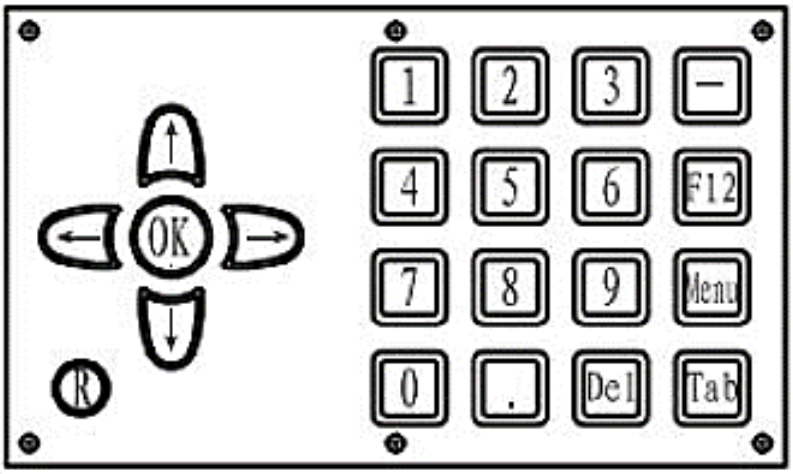

Figure 5-1: The keyboard of the device

Keys'functions:

1. **Navigation keys** (**<↑>, <↓>, <←>, <→>**): Control the cursor's movement.
2. **<OK>:** Confirm the selection or the user input.
3. **<F12>:** Shortcut key, with different definition in different interface.
4. **<Menu>:** Open the main menu.
5. **<Tab>:** Switch the cursor to the next object.
6. **<R>:** Reset all the protection and alarm teleindication on screen and front plate. Restore relay output. This is valid in any interface.
7. **<Del>:** Delete one character.
8. **Number keys:** input numbers.
9. **Symbol keys: <—> :** Minus. Use to input negative numbers, **<.>: Decimal point**. Use to input decimal number.

20.5.2.2- LCD Screen

LCD screen located on the left side of front plate, where all the monitored information will be displayed.

There are four indicator lights below LCD screen which can indicate this device's working status.

See **Figure 5-2** The lights:

Figure 5-2: The lights

1. **(RUN):** This light is green, which will light up when the device starts..
2. **(FAULT):** When there is a fault, it will light up in red and will turn off when the signal is reset or the system recovers.
3. **(ALARM):** When there is an alarm, it will light up in yellow and will turn off when the signal is reset or the system recovers.
4. **(BLOCK):** When the protection is been blocked, it will light up in red and turn off at the other time.

20.5.3- User interface

This device's user interface is showing single line diagram as **Figure 5-3**.

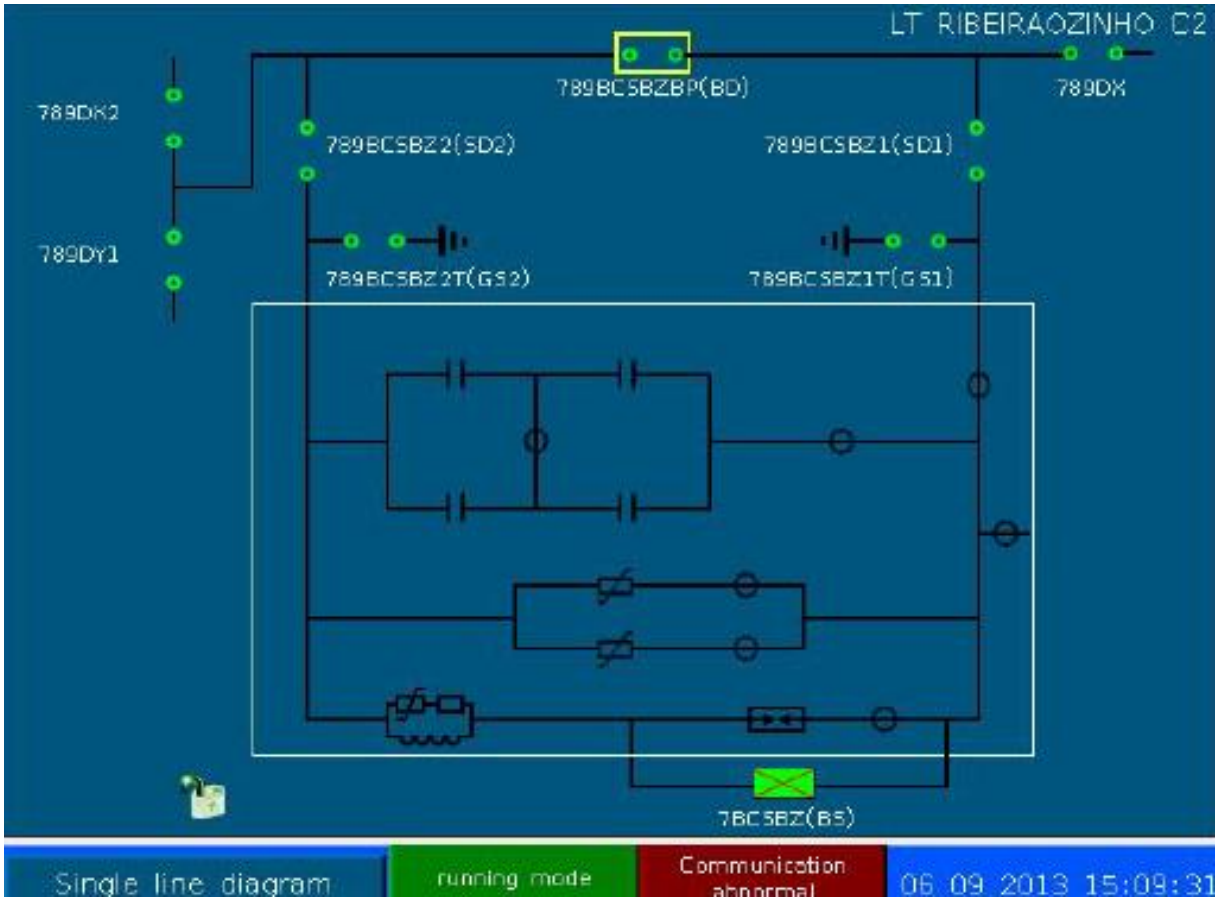

Figure 5-3: Single line diagram

20.5.3.1- Single line diagram

The single line diagram interface displays single line diagram of FSC bay, from which users can control disconnectors and switches.

In single line diagram, disconnectors' and switches' different color have different meaning:

1) : means bypass switch are open;
2) : means bypass switch are closed;
3) 和 : means bypass switch's position are uncertain;
4) : means bypass switch not configured;
5) : means disconnector are open;
6) : means disconnector are closed;
7) 和 : means disconnector's position are uncertain;
8) : means disconnector not configured;

Use keys **<↑> <↓> <←> <→>** and **<Tab>** to move the cursor to the next remote control object, **<→>, <↓>** and **<Tab>** can move cursor in a clockwise direction. **<↑>** and **<←>** move cursor in a counterclockwise direction. Press key **<OK>** to confirm object to control. Then a window pop-up, showing as **Figure 5-4**, from which you can do some operation such as "**Select**", **"Execute"**, **"Cancel"** and **"Close"**. The default target state is opposite to the current position. To operate a disconnector or a bypass switch, click button **"Select"** firstly. After the label shows successful, click button **"Execute"** to complete operation.

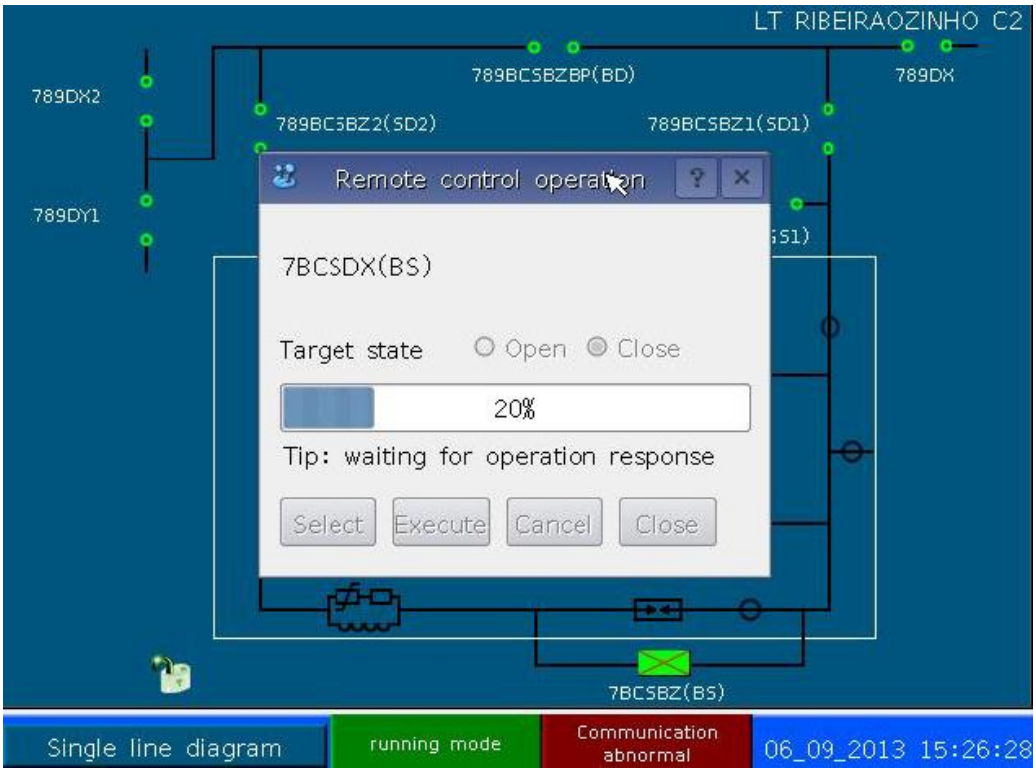

Figure 5-4: Remote control operation on signal line diagram

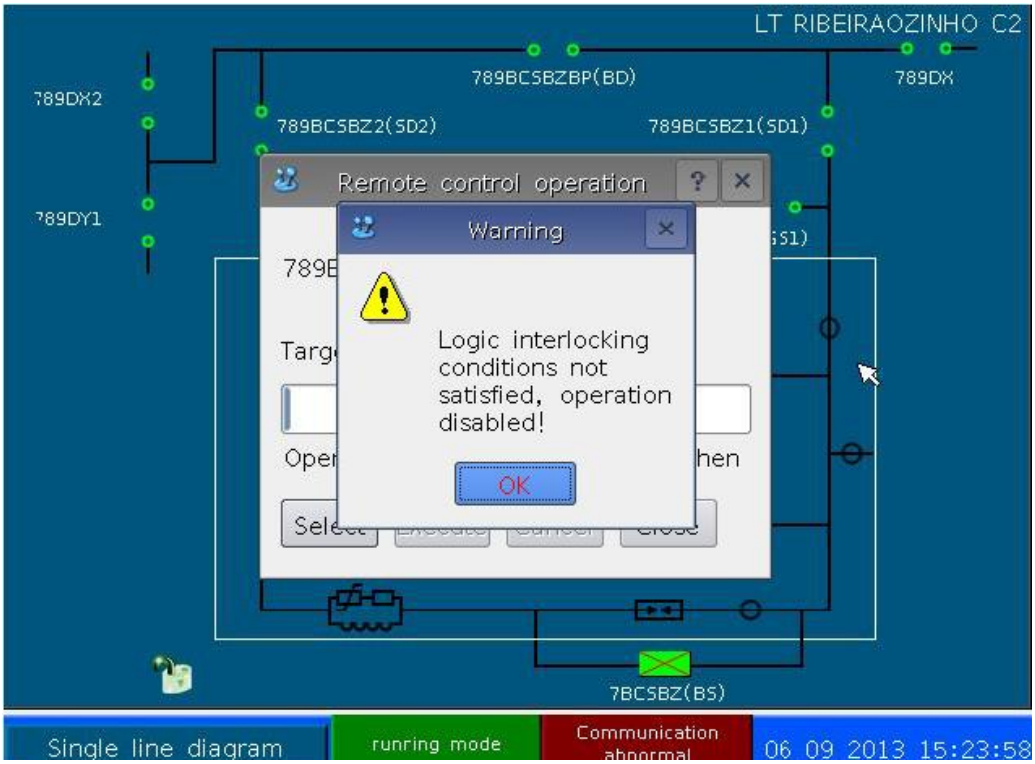

Figure 5-5: No interlock logic judge on switch operation

Before the operation, system will check whether this object can be controlled in current situation based on the interlock logic. If the check passed, object can be controlled, otherwise cannot. Figure 5-5 shows the control is forbidden because of the logic check failure.

20.5.3.2- System

The menu "System" is to configure and change the working mode of device, which includes four sub-menus: **"Login"**, **"Logout", "Device Information"**, showing as **Figure 5-6**.

Use key **<↑>, <↓>** or **<Tab>** to move cursor, the key **<←>** to return to the previous menu, and key **<OK>** to confirm the selection.

Figure 5-6: System menu

1- Login: Press key "**Login"**. The screen will be showing as **Figure 5-7**.

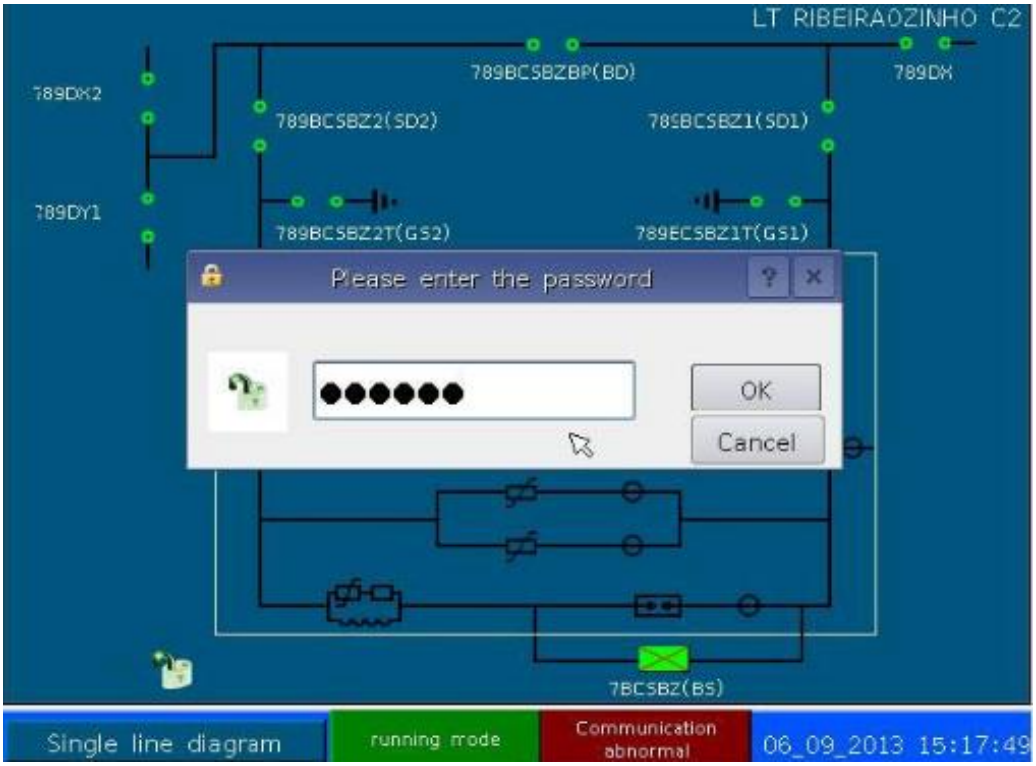

Figure 5-7: Login

2- Logout: Click button **"Logout"** to log out current logged in user. In the other way, u**ser will be logged out automatically after login 60 seconds.**

3- Device Information: The device information interface is to display software version, developer and etc. To enter this interface, click button **"Device information"**. See **Figure 5-8**:

Figure 5-8: Device information

20.6- Operation and Maintenance Notes

20.6.1- C&P system inspection notes

1- Check the indication lights in the front plate of device status**.**

a. The normal working status should be:

- **"Run":** flash at a frequency of 1 Hz;
- **"Alarm":** off
- **"Fault":** off
- **"Block":** off

b. The status description of indication lights in the front plate of laser power device:

- In CT power supply mode, CT power supply indicator lights; in laser power supply mode, laser power supply indicator lights.
- When power supply switches from laser power supply to CT power supply, both CT power supply indicator and laser power supply indicator light for 10 second, which will not occur in other situation.
- When the line current is over 0.1 times the rated current, power supply should be CT power supply.
- When the line current is under 0.03 times the rated current, power supply should be laser power supply. When the line current is between 0.03 to 0.1 times of rated value, power supply can be either way.

c. The status description of indication lights in front plate of switch operation device:

- The lights should be consistent with actual state of switches

2- Check running state of HMI software and the communication between HMI and each unit is normal or not. Check if there are abnormal events.

3- Check running state of TFR HMI software is normal or not. The communication management unit and TFR unit teleindication should be green.

4- Check **hard straps** are in the correct position or not.

5- Check **"Remote/Local/Field"**switch on M&C cabinet is in correct position or not.

20.6.2- Operation instructions

20.6.2.1- Remote control operation

1- Remote control selection:

To execute the remote control selection successfully, the following prerequisites must be met.

General requirements:

- if telecommand comes from substation monitoring and control system, the switch of **"Remote/Local/Field"**position should be "**Remote"**; if from local HMI or devices in relay room, the switch position should be **"Local"**.
- To close bypass switch, the current position of bypass switch should be open and block signal, such as BS SF6 pressure block, should be invalid.
- To open bypass switch, the current position of bypass switch should be close and the block signal, such as BS control circuit breaking alarm, line current monitoring alarm, BS SF6 pressure block, temporary lockout of FSC, permanent lockout of FSC, hould be invalid.
- To close disconnectors or ground switches, the current position should be open and meet the interlock logic requirement.
- To open disconnectors or ground switches, current position should be close and meet interlock logic requirement.

2- Remote control execution:

The remote control execution command is valid within 1 minute after selection is successful. The remote control execution will fail if more than 1 second, needing execute control selection again.

20.6.2.2- Signal reset, deactivate the permanent lockout

When protection operation or alarms occur, after recording the necessary information, such as the teleindication state on HMI and devices, users can execute the **"Signal reset"** operation. If protections or alarms cannot return, then the corresponding teleindication will not reset.

If SC is permanent lockout, execute "deactivate the permanent lockout" command before reset the signal. If both sets of C&P devices are permanent lockout, execute **"deactivate the permanent lockout"** command **three times** following **the sequence of A-B-A or B-A-B.**

20.6.2.3- Deactivate the automatic reinsertion

"Deactivate the automatic reinsertion" can end the process of automatic reinsertion in advance. If temporary lockout is **caused by MOV temperature or capacitor overload protection**, the **waiting time is much longer**, **usually several minutes or hours**. During the maintenance or test period, if protections are act, it is no need to wait for so long time. Use the command **"Deactivate the automatic reinsertion"** to save time. While in normal running mode, use the function carefully. There is a teleindication in HMI interface indicating the current state of **"Deactivate the automatic reinsertion"**

20.6.2.4- Emergency closing

In the case of emergency, turn **"Emergency closing"** switch to bypass and permanent lockout.

20.6.3- Protection events of C&P system

20.6.3.1- FSC permanent lockout event

When FSC has equipment faults, such as MOV damage, FSC will be permanent lockout. It is necessary to quit FSC and do some check and maintenance before reinserting FSC.

The events that can cause FSC permanent lockout include:

- The outlet is permanent lockout FSC protection operation (refer to **" Technology specification of FSC C&P system (UP series)"**),
- BS phase disagreement self-protection operation,
- Emergency closing,
- The permanent lockout signal output from another C&P device setting valid.

20.6.3.2- FSC temporary lockout event

When FSC is in abnormal state, such as capacity overload, or the line has fault, FSC will be temporary locked. During this period, the operation of opening switch will be blocked. When all automatic reinsertion conditions are met, FSC will be reinserted automatically. After FSC reinserts successfully, send command **"Signal reset"** to reset teleindication of **"Temporary lockout of FSC".**

The events that can cause SC temporary lockout include: protection operation s which output is temporary lockout SC (refer to **"Technology specification of FSC C&P system (UP series)"**)

20.6.3.3- FSC automatic reinsertion conditions

After FSC in the temporary lockout mode, FSC will be reinserted automatically when the following conditions are met:

- To MOV over-current protection, MOV energy low-setting protection, Line tripping FSC protection, GAP self-triggering protection, capacitor overload protection, the protection has returned when the reinsert time is over,
- To MOV temperature protection, MOV temperature is below automatic reinsertion setting value,
- No control circuit breaking alarm, line current monitoring alarm, and SF6 pressure blocking alarm happen.

20.6.3.4- Treatment to protection events

After protection acts, generally follow these steps:

- Check the related information from monitoring system, such as SOE, teleindication state, switch state, for record and print. Backup the relevant TFR files.
- If there are local HMI in protection room, record lights state in HMI interface. The teleindication state in LCD screens of C&P devices also need to be recorded.
- Record the teleindication state in the front panels of C&P devices.
- Analyze the protection events based on above information and TFR files. Find the reason caused the protection operation. Judge whether the operation process and result are reasonable. Send all this information to the manufacturer for assist analysis.

20.6.4- C&P system exceptions

Event	potential reasons	treatment
Sampled data check abnormally	Fiber loss and poor connection; poor connection between board and back-board; AD board malfunction, and etc.	Inform the manufacturer; inspect fibers; check if boards connection loose; change new boards, and etc.
Protection function blocked	Sampled data checked abnormally; stop receiving sampled data, and etc	Inform the manufacturer; check if boards connection loose; change new boards, and etc.
IRIG-B code signal loss, IRIG-B code received abnormally, pulse width of IRIG-B code is abnormal	Poor IRIG-B connector; board malfunction, and etc	Inform the manufacturer; inspect the connector; change new boards, and etc.
Temperature signal loss, temperature signal is abnormal	Poor temperature connector; temperature sensor or board malfunction, and etc.	Inform the manufacturer; inspect the connector; change temperature sensor or new boards, and etc.
Breaker control loop break alarm	Control circuit power supply fault; control circuit breaking; poor TWJ and HWJ nodes connection and etc.	Inform the manufacturer; inspect the connector and nodes, and etc.
GAP check communication outage	GAP trigger fiber or communication fiber fault, boards malfunction, and etc.	Inform the manufacturer; inspect trigger fiber or communication fiber; change boards and etc.
XX breaker phase disagreement alarm	Breaker malfunction; poor nodes connection and etc.	Inform the manufacturer; inspect connection and etc.
XX unit IO network communication error	poor connection between board and back-board; board or back-board malfunction, and etc.	Inform the manufacturer; check if boards connection loose; change new boards, and etc.
radiator temperature of laser-driven board exceeding limit	Laser-driven board malfunction and etc.	Inform the manufacturer; check Laser-driven board; change new boards, and etc.
XX unit communication error	poor connection between board and back-board; board or back-board malfunction; bad cable connections and etc.	Inform the manufacturer; check whether boards loose; change new boards, and etc.

20.6.5- Terminals switched during maintenance

1- Terminal switched when bypass SC from working state to maintenance state**.**

- Switch off hard straps of **"Tripping line output 1-6"** in both protection cabinets;
- Switch off hard straps of **"Tripping another FSC output"** in both protection cabinets;
- Switch on hard straps of "**C&P checking and repairing"** in both protection cabinets;
- Switch off the hard strap of **"M&C checking and repairing"** in M&C cabinet.

2- Terminal switched when pause one set protection system function during FSC working**.**

- Switch off hard-strap of **"Tripping line output 1-6"** in this protection cabinet;
- Switch off hard strap of **"Tripping another FSC output"** in this protection cabinet;
- Switch off hard strap of **"Permanent lockout signal output"** in this protection cabinet;
- Switch off hard straps of **"Open phase-A bypass switch output, Close phase-A bypass switch output, Open phase-B bypass switch output, Close phase-B bypass switch output, Open phase-C bypass switch output, Close phase-C bypass switch output**" in this protection cabinet;
- Switch off hard strap of **"Dual system power failure protection output 1-2"** in protection cabinet A, which means double system power off protection function doesn't work in this mode.
- Switch off hard straps of **"Temporary block of M&C opening bypass switch, Permanent block of M&C opening bypass switch, Block of M&C closing bypass switch"** in this protection cabinet;
- Switch on hard strap of **"C&P checking and repairing"** in this protection cabinet;
- **Warning:** the **"BS Emergency closing"** switch in protection cabinet A is still working in this mode.

3- Terminal switched when pause M&C system during FSC working**.**

- Switch off hard strap of **"Open bypass switch output 1-2"** in this M&C cabinet;
- Switch off hard strap of **"Close bypass switch output 1-2"** in this M&C cabinet;
- Switch on hard strap of **"M&C checking and repairing"** in this M&C cabinet.

20.6.6- The events of FSC without protection

When any of the following events happens in both two C&P systems, the protection function or output is abnormal, thus FSC is running without protection.

It is recommended to close bypass switch of FSC <u>manually</u>, <u>if it is not closed automatically</u>

NO.	Events	Description
1	Protection function is blocked.	The "BLOCK" indicator on front panel of C&P device is lighted. The teleindication of "Protection function blocked" in HMI is lighted.
2	IO network of protection logic unit communication abnormal	HMI report "IO network of protection logic unit communication abnormal operation ", corresponding teleindication is lighted.
3	C&P device power failure.	HMI report "System A(B) C&P power failure valid", corresponding teleindication is lighted.
4	Breaker operation device power failure.	HMI report "System A(B) BO power failure valid", corresponding teleindication is lighted.
5	System power failure.	HMI report "System A(B) power failure valid", corresponding teleindication is lighted.
6	BS SF6 pressure blocking.	HMI report "Phase-X BS SF6 pressure blocking alarm operation ", corresponding teleindication is lighted.
7	BS control circuit breaking.	HMI report "Phase-X BS control circuit breaking alarm",corresponding teleindication is lighted.
8	Output relays check self abnormal.	HMI report "Starting relay act abnormally" or "Blocking relay act abnormally" or "Outlet relay Y act abnormally" or "Relay controlling triode is abnormal" or "Blocking relay reset abnormally".
9	GAP check self abnormal.	HMI report "Phase-X GAP communication outage operation " or "Phase-X GAP data frame format abnormal operation " or "Phase-X GAP data abnormal operation " or "Phase-X GAP synchronization system abnormal operation " or "Low charging voltage of Phase-X GAP trigger unit capacity operation ", corresponding teleindications(if any) are lighted.

Note-1:"X" means "A" or "B" or "C".

Note-2:"Y" means either value of "1~14".

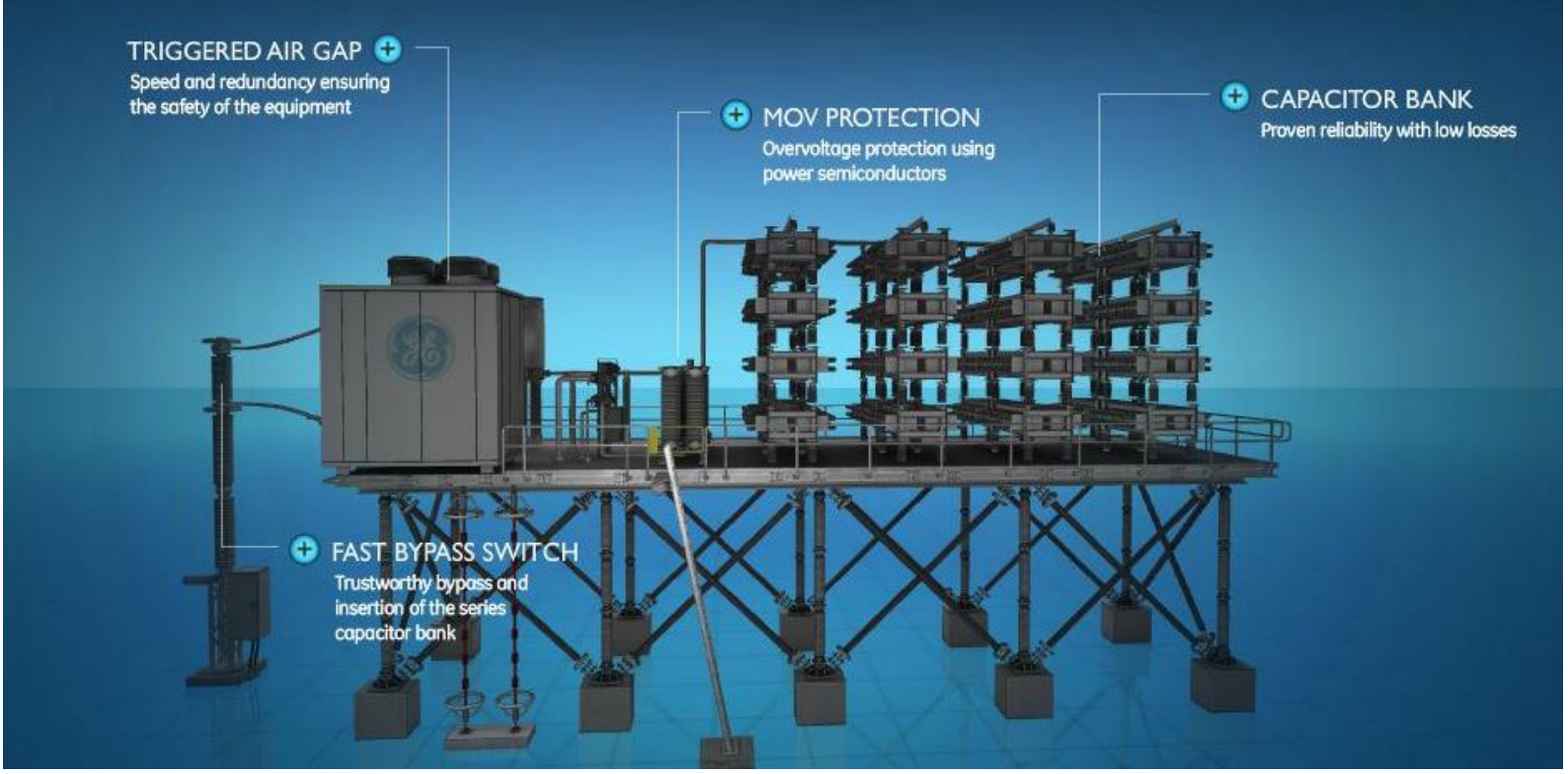

21- THE LAST NINETY YEARS OF THE FSC SYSTEM AND THE NEXT FIFTY YEARS

Series capacitors are and will continue to be an important element in power transmission systems around the world. Series capacitors in a transmission line allow higher levels of current to flow and therefore more power than could otherwise be delivered through a given transmission line.

Kayseri Capacitor Bank Project - EMTA Energy

This paper examines the ninety years history of one manufacturer's experience with series capacitors, especially with regard to protection, and also looks ahead at possible developments the field may see in the next fifty years.

The next fifty years will likely see widespread application of more fixed series compensated (FSC) transmission lines as resistance to building new lines combined with remote, renewable generation become the norm, requiring the maximum throughput from the existing transmission infrastructure.

21.1- Introduction

Series capacitors directly reduce system impedance and are an effective way of enhancing power transfer on transmission systems.

Primary benefits include:

- Improved load division on parallel circuits,
- Improved system transient stability,
- Improved system steady state stability,
- Reduced voltage drops during system swings,
- Increased power transfer capability.

Figure 1: Photo of A modern series capacitor installation

Since the transmission line current flows through the capacitors they are exposed to system fault currents. Sophisticated protection systems are needed to protect the capacitors during system faults. As such, a considerable portion of this paper **focuses on protection in particular**. Careful consideration is required for fault duty, overload currents and other transients. In some applications **potential sub synchronous resonance** must also be addressed

The first application of a transmission series capacitor was rated 1.2 MVAr and was applied for load division on a 33kV line in 1928 on the New York Power & Light system in Ballston Spa, New York.

Series capacitor units are essentially the same as shunt power capacitors but with customized ratings and often more conservative design stresses.

A modern series capacitor installation is pictured in **Figure 1.**

21.2- Power Capacitors

Power capacitors were introduced in the early 1900s using **linen paper** and **wax impregnation**. These evolved to **Kraft paper**, then to **a combination of paper and polypropylene film** in the 1960s, then to **all polypropylene film solid dielectrics** in the 1970s.

The impregnating fluids evolved from wax to mineral oil to Askarel to **today's non-PCB liquids**.

The first power capacitors were limited to about a 5 kVAr rating. Today individual units rated 500 kVAr or more are common, limited to a practical size for handling

The first EHV series application in the U.S. was on the **500kV Pacific Intertie** in 1969, interconnecting relatively large systems. These were also the first major devices to use **film/paper dielectric capacitor units.**

In order to fully understand how to protect a capacitor bank, it is helpful to understand the internal construction of a power capacitor unit.

Power capacitor units are constructed from basic capacitor elements known as rolls. **Each roll is a sandwich of electrode and dielectric sheets, wound into a roll.**

The length and width of the sheets are used to control the capacitance of the capacitor unit. Depending on capacitor unit ratings, these rolls are connected in series and parallel combinations to achieve the current, voltage, and capacitance rating of the capacitor unit. Each power capacitor unit will have a discharge resistor connected in parallel with all the capacitor rolls to assure the capacitor discharges to a safe level over a period of time when removed from service.

Dielectric failures in modern power capacitor units, although rare, are the most common failure mode. **When a capacitor dielectric fails, the electrodes puncture the dielectric reducing the capacitor roll with the failure to a short circuit**. Because the rolls are connected in series and parallel combinations within the capacitor unit, a single roll failure will result in increased stress on other series rolls in the capacitor unit, but, if properly designed, will not force a cascading failure.

The result will be **a change in capacitance of that capacitor unit**, but not the complete failure of that unit. It is possible to continue to operate that capacitor unit with a failed roll, **however it will have higher losses and a different rating.**

A. Externally Fused Capacitors

Protection in series capacitor banks were originally externally fused, meaning each capacitor was protected by a single fuse. Fuse sizes would be chosen to remove a capacitor from service when current through that unit significantly exceeded the capacitor rating. All capacitors at the same voltage level were connected together so a blown fuse would have a minimal effect on the overall bank rating.

An external current measuring scheme would be used to determine if the bank imbalance current indicated an excessive number of blown fuses and would remove the entire bank from service. Fuse failures are easy to detect from the ground as most are designed with a physical disconnection of the capacitor unit from the bus feeding the capacitors.

B. Internally Fused Capacitors

In order to reduce connection points, and reduce costs, many manufactures evolved from externally fused to internally fused capacitor banks.

With the removal of the fuse assemblies, and integrating the fuse element into the capacitor unit, manufacturers could reduce costs without changing the bank topology or protection methods.

Since the fuse elements are integrated into the capacitor unit, the fuse connections can be made to each roll within the capacitor unit. **This has the effect of only removing some of the functionality of the capacitor unit instead of the entire capacitor unit when a failure occurs, reducing the impact to the entire bank.**

C. Fuseless Capacitors

By the mid 1990's this evolution continued with the fuseless protection systems. To further reduce the effect of a dielectric failure on the capacitor bank, the fuseless protection method only removes the single capacitor section with the dielectric failure. The failure site in the roll results in a low impedance connection.

Series/parallel connections are configured in the capacitor bank so that current is segmented into limited strings such that the failure site cannot attract enough current to cause a cascading failure. This is accomplished by not connecting capacitors at the same voltage level together. **Overall bank protection is very similar to the proceeding methods by comparing imbalance currents within the bank between near identical sections.** This method has been used successfully in series capacitor protection for over twenty years without a cascading failure. **Fuseless capacitor protection is considered the preferred method by some utilities.**

21.3- Series Capacitor Bank Protection

Because series capacitors are in series with a transmission line, protection of a series capacitor is accomplished by shorting out the series capacitor bank, not by opening it.

Series capacitors present capacitive impedance to current in a transmission or distribution line.

When a fault in that line occurs, fault current flows through the capacitive impedance creating a large voltage across the capacitor. Since dielectric breakdown is a function of voltage, the series capacitors are protected by having devices which limit the voltage across the capacitor bank terminals.

Modern series capacitor banks use Metal Oxide Varistors (MOV's) to instantaneously clamp voltages across the capacitor.

A. Metal Oksit Varistör (MOV)

In the 1970s Zinc Oxide replaced Silicon Carbide as the technology used in lightning arresters. The non-linear V-I characteristic of ZnO was a significant improvement over SiC, and eliminated the need for internal shunt and series gaps in HV arrester units. It was recognized that this technology could be used to clamp series capacitor over-voltages.

External line fault oscillogram:

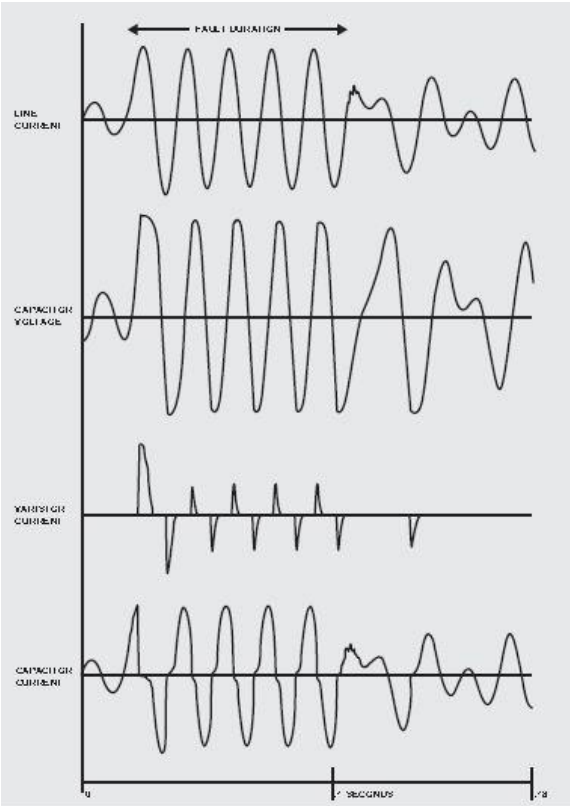

Figure 2: External line fault oscillogram

When an MOV conducts, it absorbs energy. The amount of energy an MOV can absorb is a function of the physical characteristics of that MOV.

Some of these characteristics include:

- volume,
- heat dissipation,
- and the formula of the metal oxide (different metal oxides have different energy capabilities).

In order to protect the MOV, **a switch is inserted in parallel with the MOV**. The rate at which energy is absorbed dictates the speed required of the bypass switch.

There is a reactor in the capacitor discharge path to limit the discharge current to a safe value for the capacitors, air gap, and bypass switch.

Figure 2 shows various voltages and currents during an external line fault and clearing. Note that the MOV clips the capacitor voltage peak on each half cycle, and that fault current alternates between the capacitor and the MOV. When the fault is cleared the capacitor is instantaneously in service, maximizing system stability.

If the internal line fault current is relatively low, the MOV can be sized to allow for the closing time of the bypass switch, eliminating the need for a spark gap or air gap. **The simplicity of MOV protected series capacitors has led to highly reliable equipment performance.**

In 1979 a prototype series capacitor bank with MOV as the primary protection was successfully subjected to a staged fault field test on the 345kV Bonneville Power Administration system at the North John Day substation. The varistor had 72 parallel columns of 14 series connected ZnO disks. Careful matching of parallel columns is required to achieve current sharing on these highly non-linear devices. Since 1985, all of GE's series capacitor installations have included the use of Zinc Oxide MOV.

B. Air GAP

Early series banks used simple air gap protection systems with parallel switches to extinguish the arc created in the gap once it fired, to protect the capacitors. To allow for gap deionization there was a long delay until the capacitors could be restored to service following a line fault. In the late 1960's, a key specification requirement for **the Pacific Intertie banks** was "**high speed"** (3-5 cycle) reinsertion following fault clearing to improve power transfer capability.

Figure 3 illustrates the effect of reinsertion time.

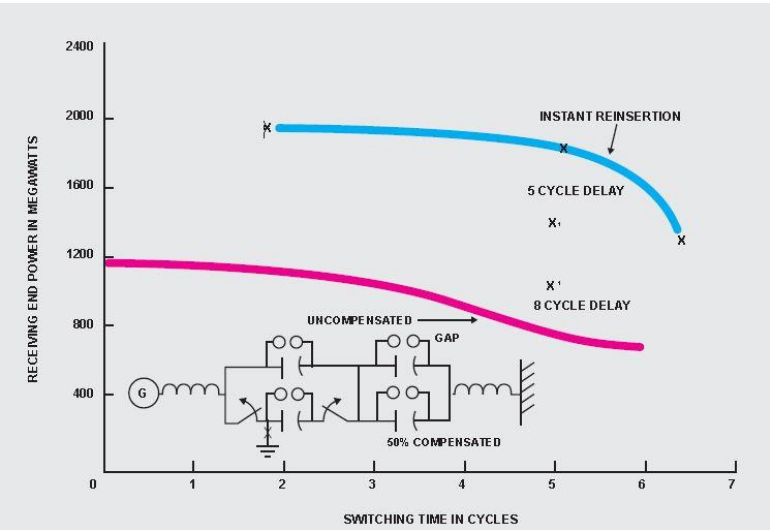

Figure 3: Effect of reinsertion delay on power transfer.

There were two different technologies applied in these devices.

One system used a high pressure air gap/switch to rapidly extinguish the arc and restore gap dielectric strength.

The other system used a voltage sensing Triggered Vacuum Gap with a fast vacuum switch that could reinsert the bank in 3 cycles after fault clearing.

Typical gap spark-over settings for both technologies were 3 p.u. of rated capacitor voltage. This was necessary to withstand reinsertion transient voltages.

In modern series capacitor protection systems with very high fault currents there are basically two bypass switches, a Triggered Air Gap (TAG) and bypass breaker. A TAG is a very fast bypass switch that can operate in the hundreds of microseconds range.

The best TAGs are self-contained and integrate energy absorbed by the MOV without relying on communications with a ground based control system.

GE's present TAG design uses plasma injection to initiate the arc across the gap and was first installed at **Hydro Québec's Chibougamau substation** in 1994.

The next generation TAG currently under development uses **"Modular Arc"** technology and will be smaller and lighter.

C. Bypass Switch

Once a gap is conducting, the only way to reset it is to remove voltage across it and current through it. The bypass switch closes automatically on all TAG conductions. The bypass switch can also be triggered by external signals such as failure of the line breakers. It also allows manual or remote bank insertion and bypass.

D. MOV and TAG Protection

While there have been significant design improvements in the components and the protection controls, the same basic system as introduced at North John Day in 1979 is still in use today.

Figure 4 shows a **one-line diagram** of the circuit.

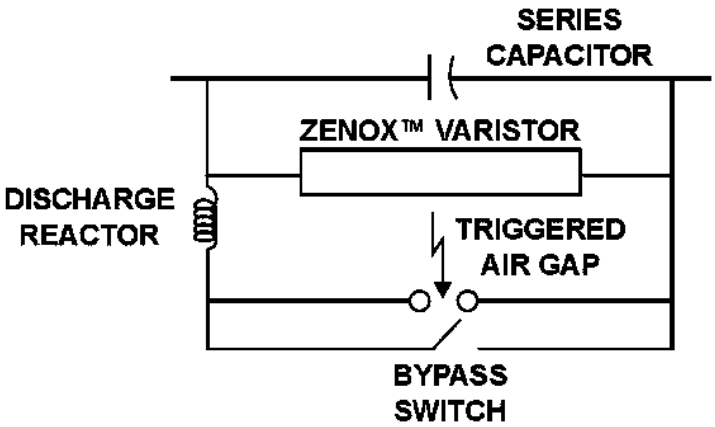

*Figure 4: **one-line diagram***

The MOV limits the voltage across the capacitor under all conditions, with a typical protective level of about 2.0 p.u.

21.4- Thyristor Controlled Series Capacitors

A Thyristor Controlled Series Capacitor (TCSC) is a series capacitor bank designed to adjust the amount of VAR's in series with a transmission line dynamically.

TCSC systems have many uses including instantaneous adjustment of compensation during a fault sequence to re-establish system stability, controlling power between parallel circuits, and adjustments to the VAR rating of a series capacitor bank dependent on current in the compensated line.

Due to their complexity and expense, Thyristor Controlled Series Capacitor banks are relatively rare, but there are systems that have been in operation since the mid 1990's.

21.5- The Next Fifty Years

Electric power systems were originally built around the arrangement of central power generation stations serving local customers. The transmission system is now expected to carry bulk power in ways it was never designed for. The expectation is that this transmission requirement will only increase.

As power generation sources continue to evolve, lately towards renewables, the transmission grid is asked to transmit more and more power over longer distances.

Series capacitors will continue to be an effective tool for system planners as they can facilitate more power to flow through the same transmission network.

As technology improves and the need for transmission continues, one should expect a trend towards more lines with higher levels of series compensation.

At the time of writing, the authors' company has supplied one hundred ninety-six series capacitor banks over the last ninety years including three TCSCs. A further eleven series banks are presently under construction.

Based on this extensive experience and the trends seen in the industry of late, some observations are made below on the possible future of series capacitor bank offerings.

A. Sub-Synchronous Interactions

One of the challenges that can come with application of series capacitors are sub-synchronous interactions (SSI) with other elements of the power system. It should be noted that the vast majority of series capacitor installations have been applied without any issues associated with sub-synchronous interactions and require no mitigation

However, as wind generation is often remote to the load centers and can be connected with long radial lines, series compensation on these lines can produce a concern of sub-synchronous resonance (SSR) and/or sub-synchronous interactions.

It has been demonstrated that changes in the controls of type 3 wind turbine generators can mitigate **the problems with sub synchronous control interactions** between wind turbines and series capacitors.

It has been the experience of the authors' company that mitigation of some of these concerns may also be possible using passive filtering built into the series bank itself.

Future series capacitor installations may more commonly include mitigation of sub-synchronous interactions which may be either active such as **TCSC or passive filtering**.

These new mitigation techniques may allow placement of series capacitors in locations that were once not feasible

B. Polymer

A materials change that may have an effect on the future of series capacitors is the advancement of polymer. Traditionally the MOV has been housed in a porcelain housing. A change to a polymer MOV housing material has two significant and desirable benefits.

One is the weight savings on the series platform.

Depending on the short circuit strength of the system where the series capacitor is installed, there can be a significant number of MOV on a series capacitor platform. This weight savings is potentially enough to reduce the structural requirements of the platform itself. This is especially true in high-seismic applications.

Second, the polymer's physical properties are desirable in the case of mechanical damage or in the event of a catastrophic failure.

A disadvantage of polymer is that it is less effective in dissipating heat.

This change in material may facilitate a lower structural costs which may help with the economic feasibility of new banks

C. Protection and Sensing

Protection and sensing systems have progressed since the first series capacitor was installed in 1928. The most significant change obviously being from analog to digital based devices.

The desire for noise immunity, decreased temperature sensitivity, and overall robustness of protection and controls is as high as ever.

It is expected that over the next fifty years speed and accuracy will continue to increase, while immunity from environmental affects will become more prevalent.

Legacy measuring devices using electromagnetically induced currents in an iron core, for example, may one day be replaced with **"lighter"** devices without an iron core.

Protection devices for series compensation banks have historically used non-standard substation protection devices. As more sophisticated and faster protection devices become available on the market, and support interfaces to a wider variety of sensors, ground based series compensation protection systems may migrate to hardware platforms that have other applications within substations and switchyards.

This will simplify training of testing and maintenance personnel while reducing the number of spare parts required in inventory at a substation.

The complexity of the series compensation platform represents a significant design limitation. Because series compensations systems are in series with a transmission line, even the “low voltage” side is still considerably above ground potential. This makes getting signals from the platform to the ground-based control system very challenging.

Most systems today use an optical isolation method, but this requires sensitive optics and electronics that need to operate at line potential.

Future protection systems will work to minimize or eliminate platform electronics to maximize robustness of the system and simplify maintenance and troubleshooting.

Fast bypass devices may also continue to evolve as technology advances. Modern series capacitor bypass devices use a combination of varistor, triggered air gap, and bypass switch.

The faster the gap-switch combination can react, the less zinc is needed in the form of varistors. As the varistors are expensive, this can result in overall cost reduction.

If a bypass switch can react quickly enough, **the triggered air gap may become unnecessary**.

Or, conversely, if a gap can be rated for sustained high current, or distributed, **the bypass switch could be eliminated.**

It is possible that the next fifty years will see the removal of one of these devices from typical series capacitor installations.

All of these protection improvements will tend to drive higher reliability and better precision at lower cost.

As the cost of series capacitors decreases, adding more series compensation to the transmission system will only become more economically achievable

D. Return of Distribution Series

Distribution Series capacitors have been around for decades, but they may find a new market in the next fifty years driven by several factors.

As distributed generation becomes more prevalent, voltage regulation will become a growing challenge as it will be very difficult to predict actual distribution flows. This makes protection extremely challenging and requires significant instrumentation, communication, and complex algorithms to calculate capacitance needed to maintain voltage levels.

Series compensation is an elegant solution to this problem as it generates VARS proportional to current through it. As load profiles change, the series compensation naturally adjusts to match the need.

Impact from Geomagnetic Disturbance is another issue that can be diminished through the use of distribution series capacitance.

It has been observed that transmission lines with series compensation do not have the same issues with Geomagnetic Disturbances as non-compensated lines, as the series capacitor acts as a DC block and does not allow the ground currents to flow through the transmission lines.

A similar phenomenon can be expected in smaller distribution lines. **A series capacitor may prove to be a simple and helpful solution where a distribution line is determined to be at high risk.**

E. Capacitor Ratings

The rating of a capacitor unit has grown over the years and has d**emonstrated that fewer capacitors of higher rating usually prove more economical.**

The practical limit is based on the weight of the capacitor and the personnel and equipment handling that weight. Advancements in material could enable an even higher rated capacitor unit than is available today.

Some utilities already consider the weight of a capacitor unit beyond the limit of what one person can safely handle.

If cranes and other lifting devices are required anyway, the industry could push towards fewer, heavier capacitors with higher ratings, in the name of overall cost savings

21.6- Summary

Since their first application ninety years ago and through the work of giants such as Charles Concordia, the industry has gained much insight. Series capacitors have been applied throughout the world and are now in wide use.

As the transmission systems around the world are required to move more power over longer distances, the series capacitor will continue to be an effective tool for transmission planners and system operators.

As series capacitor protection systems, materials, and technologies continue to advance, their use in the transmission system will only increase.

The series capacitor will continue to be a part of the power and energy world through the next fifty years…

REFERANSLAR:

1. Larry E. Bock and Graham R. Mitchell, "Higher Line Loadings with Series Capacitors," Transmission Magazine, Mar. 1973.
2. Stanley Miske Jr. "A New Technology for Series Capacitor Protection," Electric Forum Magazine, vol. 5, No. 1, 1979
3. J.J. LaForest, Transmission Line Reference Book 345kV and Above, 2nd ed, Palo Alto, CA: EPRI Publication EL-2500, 1987, p20.
4. E. K. Shelton, "Series Capacitor Installation at Ballston, N. Y.," in General Electric Review, vol. 31, pp. 432-434, August 1928.
5. E. Louwerse, "Fuseless capacitor technology: a great opportunity for Eskom," Eskom, Johannesburg, South Africa, Substation Technology Department, Report ST 95/02.
6. S. Borlase, Smart Grids; Infrastructure, Technology, and Solutions, Boca Raton, FL: CRC Press, 2013, pp. 1-6,28-32,155,210-211.
7. J. W. Butler and C. Concordia, "Analysis of Series Capacitor Application Problems," published by AIEE, June 28, 1937.
8. N. W. Miller, E. V. Larsen, D. H. Baker, and G. Drobnjak, "Advanced Series Compensation for Long Distance AC Interconnection: Concepts and Practice," presented at 2003 International Conference on AC Power Delivery at Long and Very Long Distance, Novosibirsk, Russia, September 2003.
9. G. D. Irwin, A.K. Jindal, and A.L. Isaacs, "Sub-Synchronous Control Interactions between Type 3 Wind Turbines and Series Compensated AC Transmission Systems," presented at the IEEE Power Engineering Society General Meeting., Minneapolis, MN, July 2011.
10. E. Larsen, "Wind Power on series-compensated lines," 2010 Wind-Power Conf and Exhibition, Dallas, TX, USA, May 23-26, 2010.
11. A.K. Jindal, G.D. Irwin and D. A. Woodford, "Sub-Synchronous Interactions with Wind Farms connected near series compensated AC lines," 9th Int. Workshop on Large scale integration of wind, Quebec City, Canada, pp. 559-564, Oct 18-19, 2010.
12. Einar V. Larsen, "Wind Generators and Series-Compensated AC Transmission Lines," presented at the IEEE PES General Meeting, San Diego, CA, July, 2012.

YAZARLAR:

- Daniel Korot, Senior Member IEEE
- Paul Marken, Senior Member IEEE
- Larry Bock, GE Digital Energy, Fort Edward, NY

22- EMTA ENERGY

Our core objective is to create added value for our customers by offering a "**One Stop Shop**" concept, which includes consulting, engineering, execution, commissioning, project financing, built and operational services, spare part management and after-sales services under one contract. This gives our customers a strategic advantage to control their project investment plan with the help of a reliable and experienced EMTA ENERGY team.

22.1- ENERGY PRODUCTION

EMTA Energy is a turnkey project contractor (EPC) company that has undertaken significant turn-key projects both at home and abroad of operating in all areas of the Energy Sector. During many years of sharing experiences of the energy sector with customers, **EMTA Energy** provides solutions such as feasibility, design, installation, construction works, electrical and mechanical assembly, test-commissioning and operation services.

Emta Energy, which has successfully completed many projects at various points in the world, has gained the competence of many private and public institutions.One of the biggest strategies of the domestic energy investment sector, Wind Energy Power Plants is the target sector for **Emta Energy**.

EMTA Energy offers turnkey solutions such as complete electrification Works (EBOP) within the scope of energy production facilities (HEPP, RES, GES, Natural Gas and **Thermal Power Plants**,) **Air and Gas Insulated Substations** (AIS, GIS), Energy Transmission and Distribution Lines in every field from the solutions such as energy production to the interconnected system and it adopting the motto "**ONE STOP SHOP**" in the energy sector and continuing its operation.

Emta Energy, which has successfully completed many projects at various points in the world, has gained the competence of many private and public institutions.

One of the biggest strategies of the domestic energy investment sector, Wind Energy Power Plants is the target sector for **Emta Energy**.

Turnkey services offered by **EMTA Energy** for the installation of Wind Power Plants in the most efficient and most reliable way; Feasibility works, Project Design and Calculations, Construction Works (**Transportation Roads, Turbine Foundations, Transformer Center Construction Works, Power Plants**, etc.), Wind Park Electrical and Communication Infrastructure (MV Underground, FO Wiring, etc.) and MV&HV Energy Transmission Lines are realized.

22.2- OVERHEAD TRANSMISSION LINE

In the best quality and reliable way with its expert and experienced technical team, **EMTA Energy** offers a variety of services as energy transmission lines project design, construction, renewal and maintenance to the its costumers in in approximately 5 continents.

In general energy transmission lines, consist material groups as conveying lines, conductors, grounding equipment and insulator equipments which have different construction structures which are constructed by adhering to the standards, which provide the transportation of the generated electrical energy to distant points, are transmission lines.

Our experiences and achievements have provided us to understand the specific features and security measures of High Voltage Energy Transmission Line operations.

With its expert staff, **EMTA Energy** continues to provide the most efficient and reliable way to design and install transmission and distribution lines and carry out the start-up, voltage transformations and maintenance works for the requirements of energy transmission line projects.

In addition, it provides underground networks and services along with network channel projects and feeder design up to 34 kV.

22.3- AIR & GAS INSULATED SWITCHGEAR (GIS)

AIS SUBSTATION:

It is the facilities that have various type of transformers, circuit breakers, separators and surge arresters such as many HV (110-750 kV) and MV equipments which are brought to the desired transmission level by lowering and raising by means of electrical transformer which collects or distributes the electrical energy in the switchyard.

Air Insulated Substations (AIS); Beacause of both the cost is low and all the equipment is clearly visible, it is easy to maintain and to intervene in possible failures. So it is preferred primarily. It is widely used where there is no land limitation and where conditions are appropriate.

With its experienced staff in engineering field, **EMTA Energy**, **AIS Projects** are carried out successfully with the highest quality and reliable.

GIS SUBSTATION:

It is **SF6 gas** insulated metal enclosed transformer substation and naturally, it offers higher reliability and flexibility than Air Insulated switchyard sites following the latest Transformer Center design criteria. Due to a closed design with gas, **Gas Insulated Substation (GIS)** is the most suitable solution for closed underground and overground substations. Also HV conductors, circuit breakers, switches, current-voltage transformers, earthed metal kept in case are in SF6 gas.

Due to superior insulation and design features; GIS substations may be taken up to 10 times less space than AIS substations. Therefore, in the existing land area is small (urban centers, industrial settlements, mountainous regions, narrow valleys or underground power plants, etc.) and in areas requiring high cost, Gas insulated systems are replacing traditional switchgear systems.

Through to the periodical maintenance, they age too late and their lifespan is much longer than in conventional switchgear facilities. There is no need to refill the gas levels during the life of their equipment (about 40 years). Through to its comprehensive pre-assembled design, it can be installed faster and requires lower maintenance costs.

With its experienced staff in engineering field, **EMTA Energy**, **GIS Projects** are carried out successfully with the highest quality and reliable.

22.4- UNDERGROUND POWER CABLE

In order to avoid visual pollution of the overhead lines in the environment or where the air transmission of energy is not suitable, these cables are used in applications where energy is transmitted from underground, not from air.

In these applications, When laying down underground power cables, conditions such as suitability of land, location of industrial zones where harmful chemical substances are located, electricity and telephone lines and water channels, etc. in environment should be taken into account.

One of the growth targets of **EMTA Energy** is **Underground Power Cable (UPC)** Projects and, therefore, it is increasing the diversity of its business by offering solutions together with its strategic business partners in the UPC projects it offers to the public and private sector.

EMTA Energy continues to provide turnkey services for Medium and High Voltage Projects in Turkey and abroad.

22.5- ENERGY MANAGEMENT

EMTA Energy is one of the most reliable partners in developing and managing the energy infrastructure needed by the sector and provides these infrastructure services to its investors from a single point by the quality, reliability and efficiency way.

TRANSPORTATION:

The following topics have provided services for many major metro and tunnel projects

- Automation Systems
- DCS, PLC, SCADA
- Jet fan air conditioning systems
- Control systems for lightening, traffic signalization
- Energy supply and control with medium voltage units
- I/O panels &equipments
- Field supervision
- Commissioning

ENVIRONMENTAL & WASTE WATER TREATMENT:

• Sea & Underground Water Treatment (Advanced Treatment Projects)
• Industrial and Domestic Waste Water Treatment Plants (WWTP)
• Process Control for WWTP
• Industrial and Domestic Solid Waste Treatments Solutions
• Aqua Pure Technologies (Innovative non thermal plasma technology solution for advanced oxidation process)
• Air Pollution Solutions
• Lextran (Advanced clean air solution)
• Waste to Energy Units
• Environmental Surveys: Risk Assessment, Professional Literature Surveys

22.6- EMTA SERVICE

EMTA Energy Service Department provides services such as operation and maintenance activities, Retrofit applications, status detection with Check-Up, efficiency improvement works, energy optimization and training and consultancy for **various power plants**, **industrial plants, substations (GIS, AIS) and energy transmission lines.**

23- SIEYUAN ELECTRIC

Sieyuan Electric Co., Ltd. (hereinafter referred to as "Sieyuan Electric "), established in December 1993, is a well-know listed company in China specialized in R&D of electric power technology, equipment manufacturing and engineering services. So far, it has been honored the titles of Innovative Company in Shanghai, National Key Torch Plan High-tech Enterprise, China Energy Equipment Top Ten Private Company, etc. At present, Sieyuan Electric has ten wholly owned and holding subsidiaries with a wide product range covering various specialized fields of T&D technology and equipment, including both of the primary and the secondary equipments. The main products and core technology have been reaching the leading advanced level in the world, and the Company provides the customers with unique electrical solutions for substation.

Sieyuan Electric, pursuing the enterprise mission of **"making electricity transmission and distribution safer, more controllable and more efficient"** and relying on complete product series and professional engineering design ability, provides mainstream power system operators as well as industrial and power generating (hydropower, wind power, solar power) clients from more than 60 countries and regions with innovative products, solutions and EPC project total package

24. REFERANSLAR

1. *Installation Manual Book for 500kV Fixed Series Compensation Device - China EPRI Science & Technology Co., LTD.*
2. *TCB400-396000/660AQW Type Series Capacitor Bank - Instruction Manul Book / Sieyuan Electric*
3. *Y4CR-type MOV for the series capacitor banks, Installation Manual Book, (SM – MOVT - 2011) / CEPRI (China Electrical Power Research Institute)*
4. *KCX280/60-type Spark gap for the series Compensation, Installation Manual (SM- GAPT - 2011）/ CEPRI (China Electrical Power Research Institute)*
5. *1HSM 9543 22-12en Series Capacitor By-pass Switch / ABB*
6. *Dry-type Air-core Reactor, User Manual Book, September, 2009 / BPEG (Beijing Power Equipment Group)*
7. *Type LMZP-3.6-2 Current transformer for the series compensator, Installation and usage Manual Book (SM-CXCT-2011) / CEPRI (China Electrical Power Research Institute)*
8. *HGXZ—550-type Optical fiber column for the series capacitor banks - Installation Manual Book -(SM-HGXZU-2011) / CEPRI (China Electric Power Research institute)*
9. *(UP series) Specifications Manual Book of FSC Control and Protection System / Sieyuan Electric*
10. *Operation and Maintenance Manual of 420kV FSC High-Voltage Equipments /Sieyuan Electric*
11. *Power System Capacitors by Ramasamy Natarajan ANS Substation design*
12. *Application guide – V AYADURAI BSC, C.Eng, FIEE Engineering Expert*
13. *(UP series) The operation and maintenance manual book of FSC control and protection system / Sieyuan Electric*

WE DESIGN FUTURE
WITH "ONE STOP SHOP"

☺

EMTA GROUP

EMTA

EMTA ENERGY

EMTA GLOBAL TRADE

EMTA TRADE

JAUDA KOKS

TUZLA GARDEN HOTEL & SUITES